Pocket Book for the Leather Technologist

Fourth edition, revised and enlarged

BASF Aktiengesellschaft
67056 Ludwigshafen
Germany

BASF

Preface

In this fourth edition of our Pocket Book for the Leather Technologist, the content was carefully revised and updated. Two new chapters “Leather goods” and “Fur” were added. The chapter “First aid” was cancelled. Please use the appropriate medical literature if you need information on this issue.
We have updated the information on the properties, use and nature of our products for the leather industry. The principal methods used in leather production are briefly described. The information given in the chapter on types of raw skins is intended to serve only as a guide. The chapter “Safety and Environmental Protection” was completely revised and supplemented by detailed information on the safety data sheet.

We hope that this carefully revised and enlarged edition will meet with the same approval as the preceding editions and that the practical tanner and others interested in the leather business will find this volume a helpful and rapid source of reference for the variety of products that we offer for the production of leather.

Nevertheless, it is possible that you may have some further questions. We have issued a range of publications that contain further information on a variety of topics. More detailed information on our products is contained in our pattern cards and Technical Information leaflets with examples of application. Our technical staff will be pleased to advise you personally on any queries that you may have.

Visit us also at: **http://www.basf.com/leather**

In presenting this pocket book, we cannot claim to serve in any but an advisory capacity and can undertake no liability.

The names of our products are, as a rule, registered trade marks. No significance may be attached to the absence of a sign to this effect against any product mentioned in this book.

We know of no ill effects that could have resulted from using the BASF products mentioned in this book for the purpose for which they are intended and from processing them in accordance with current practice.

According to the experience we have gained up to now and other information at our disposal, our products do not exert any harmful effects on health, provided that they are used properly, due attention is given to the precautions necessary for handling chemicals and the information and advice given in our Safety Data Sheets are observed.

Contents

Coloured pages

Raw skin

Structure of skin

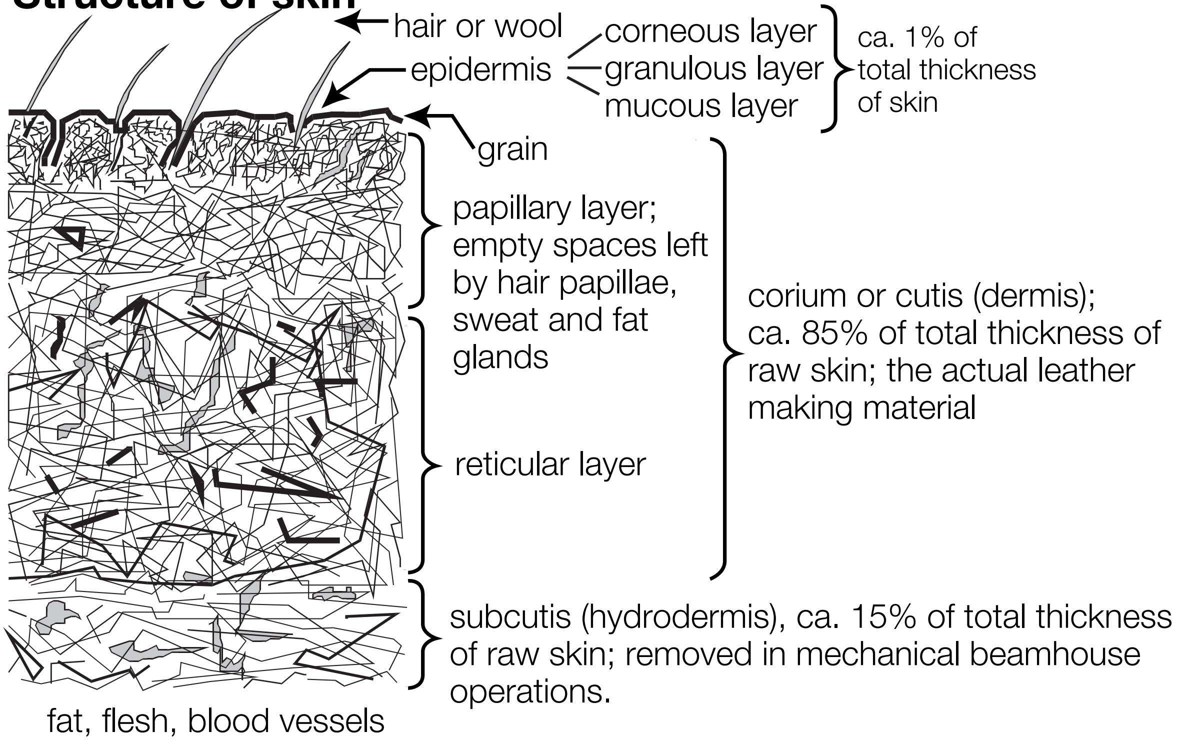

Structure of hair

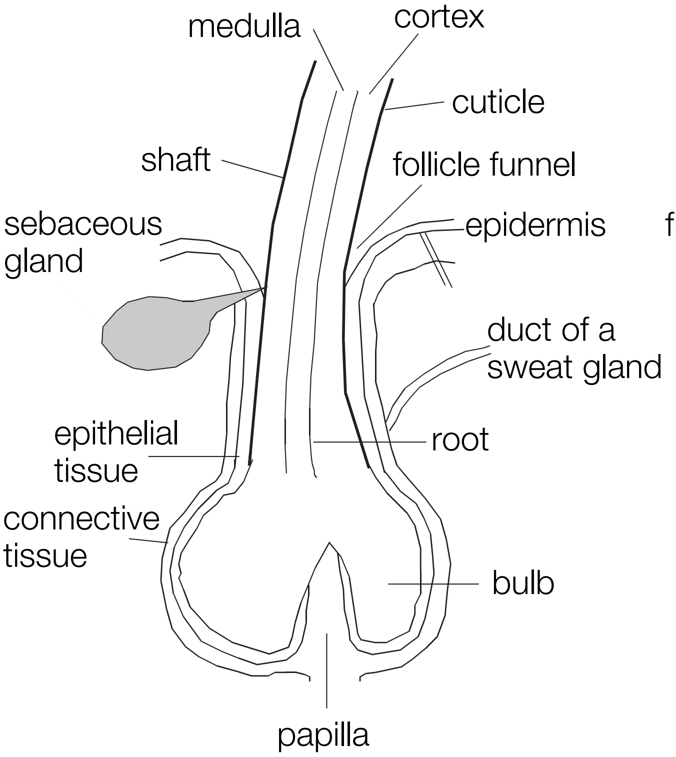

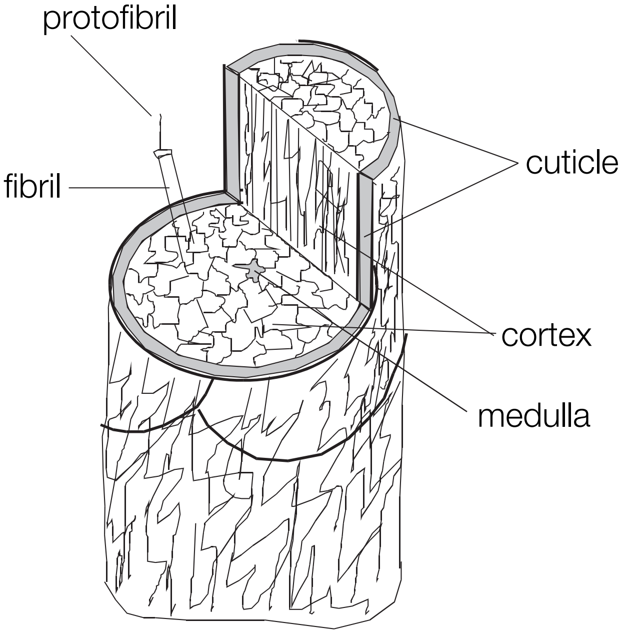

Cross-section of hair shaft

Fibrous structure of true skin (collagen)

Fibre bundles composed of fibres (20 – 200 µm in diameter) which in turn consist of elementary fibres (about 5 µm in diameter), and these of fibrils (10 – 100 nm in diameter), and these of microfibrils (about 5 nm in diameter), and these of macromolecules.

The collagen molecules (tropocollagen) are about 280 nm long, about 1.5 nm in diameter and have a molecular weight of about 300000. They are composed of three polypeptide chains which are twisted together in form of a helix (triple helix) and which consist of amino acids that are linked together by peptide bonds.

1 kg raw skin has a reactive inner fibre surface area of 1000 – 2500 m^2.

Amino acids

The amino acids are the constituents of proteins. They contain the amino group $-NH_2$, the carboxyl group -COOH and the radical -R. The general formula is:

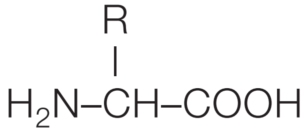

$$\mathrm{H_2N{-}\overset{\overset{R}{|}}{C}H{-}COOH}$$

The radical -R characterizes the amino acids and classifies them into the following groups:

- Non-polar, non-reactive = Hydrogen, aliphatic compounds, aromatics.
- Polar, reactive = $-OH$, $-SH$, $-COOH$, $-COO^-$, $-CO\text{-}NH-$, $-CO\text{-}NH_2$, $-COOR$, NH_2, NH_3^+

There are 20 different amino acids in the structure of collagen and 21 – 22 in that of keratin. Typical of collagen is the presence of hydroxyproline (HYP) and glycine (GLY); characteristic of keratin is the presence of the sulfur-containing amino acid cystine (CYS).

Amino acid	Radical -R	Abbreviation	Frequency in collagen	wool
Glycine	-H	Gly	++++	+
Alanine	$-CH_3$	Ala	+++	+
Valine	$-CH-(CH_3)_2$	Val	+	+
Leucine	$-CH_2-CH-(CH_3)_2$	Leu	+	+
Isoleucine	$-CH-(CH_3)-CH_2CH_3$	Ileu	+	+
Phenylalanine	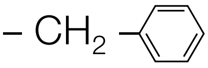	Phe	+	+
Methionine	$-CH_2-CH_2-S-CH_3$	Met	(+)	+
Serine	$-CH_2-OH$	Ser	+	++
Threonine	$-CH(OH)-CH_3$	Thr	+	+
Tyrosine	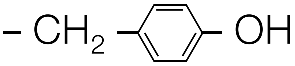	Tyr	(+)	+
Cysteine	$-CH_2-SH$	Cys	–	++++
Cystine	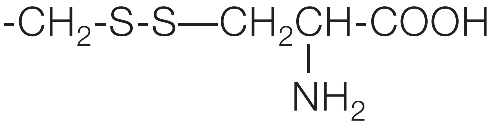 $-CH_2-S-S-CH_2\underset{\displaystyle NH_2}{\underset{\vert}{CH}}-COOH$	$(Cys)_2$	–	+++
Aspartic acid	$-CH_2-COOH$	Asp	+	++
Asparagine	$-CH_2-CO-NH_2$	Asn	+	++
Glutamic acid	$-CH_2-CH_2-COOH$	Glu	++	++
Glutamine	$-CH_2-CH_2-CO-NH_2$	Gln	++	++
Lysine	$-CH_2-CH_2-CH_2-CH_2-NH_2$	Lys	+	+
Hydroxylysine	$-CH_2-CH_2-CH(OH)-CH_2-NH_2$	Hyl	+	+
Arginine	$-(CH_2)_3NHC(NH)-NH_2$	Arg	++	+
Histidine	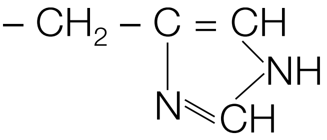	His	+	+
Tryptophane	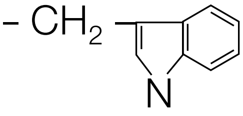	Trp	–	+

Amino acid	Chemical structure	Abbre-viation	Frequency in collagen	wool
Proline	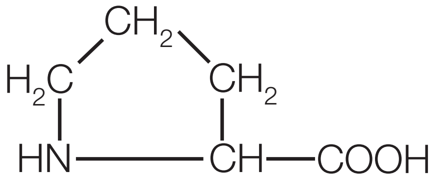	Pro	+++	+
Hydroxyproline	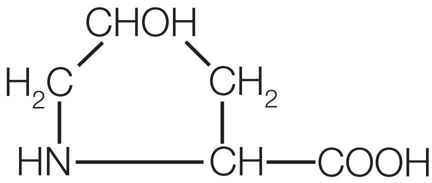	Hyp	++	–

Structure of a polypeptide chain of amino acids (AA)

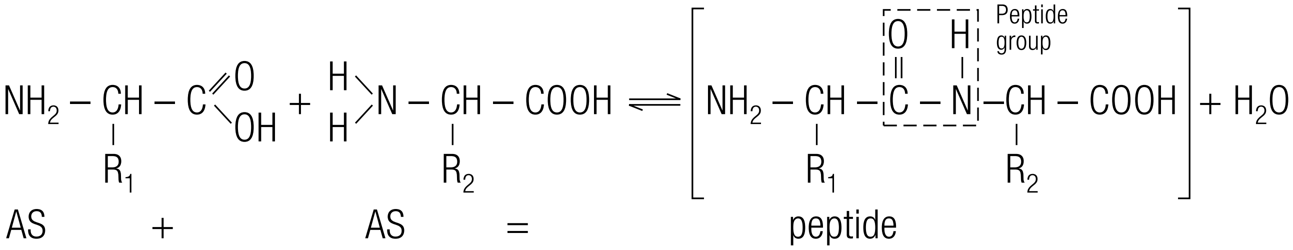

Multiple peptide linkages (n) give polypeptides in form of long chains (n) for collagen about 1000.

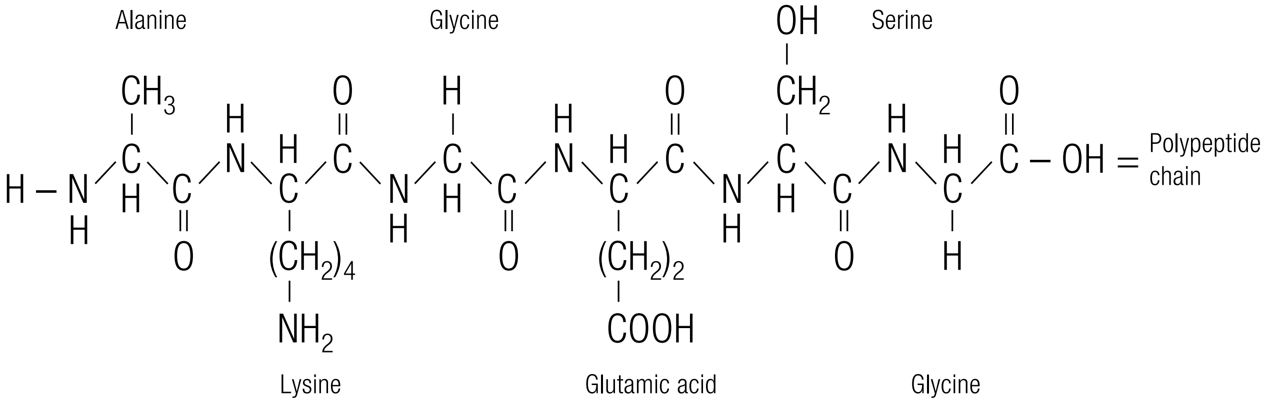

N-terminal AS → Ala – Lys – Gly … //… Glu – Ser – Gly ← C-terminal AA

Bridge linkages in proteins

Cross-linking bridges decisively influence the structure, stability, reaction capacity and overall behaviour of proteins. They may occur within the peptide chain (intrachain longitudinal cross-linkage) or between two or several adjacent peptide chains (interchain transverse cross-linkage).

1. Principal valence linkages (covalent linkage)

a. Disulfide bridges of cystine

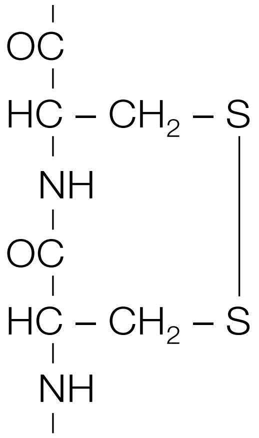

$$\begin{array}{ll} | & \\ \mathrm{OC} & \\ | & \\ \mathrm{HC} & -\mathrm{CH_2-S} \\ | & \qquad\quad | \\ \mathrm{NH} & \qquad\quad | \\ | & \qquad\quad | \\ \mathrm{OC} & \qquad\quad | \\ | & \qquad\quad | \\ \mathrm{HC} & -\mathrm{CH_2-S} \\ | & \\ \mathrm{NH} & \\ | & \end{array}$$

intrachain longitudinal
cross-linkage

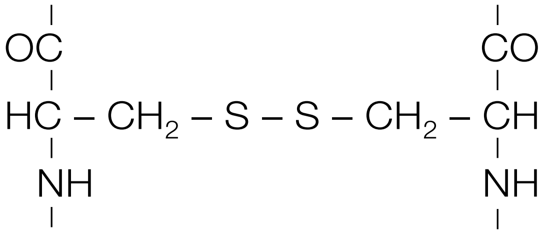

$$\begin{array}{ccc} | & & | \\ \mathrm{OC} & & \mathrm{CO} \\ | & & | \\ \mathrm{HC} & -\mathrm{CH_2-S-S-CH_2}- & \mathrm{CH} \\ | & & | \\ \mathrm{NH} & & \mathrm{NH} \\ | & & | \end{array}$$

interchain transverse
cross-linkage

b. Ester linkage bridges between carboxyl and hydroxy groups in side chains

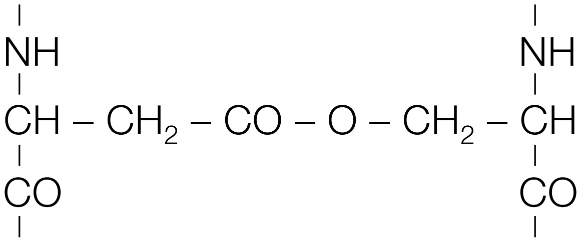

$$\begin{array}{ccc} | & & | \\ \mathrm{NH} & & \mathrm{NH} \\ | & & | \\ \mathrm{CH} & -\mathrm{CH_2-CO-O-CH_2}- & \mathrm{CH} \\ | & & | \\ \mathrm{CO} & & \mathrm{CO} \\ | & & | \end{array}$$

(Asp + Ser)

c. Side chain peptide bridge linkages between the acid and the basic amino acids

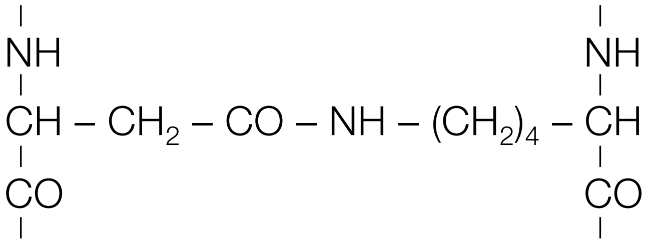

$$\begin{array}{ccc} | & & | \\ \mathrm{NH} & & \mathrm{NH} \\ | & & | \\ \mathrm{CH} & -\mathrm{CH_2-CO-NH-(CH_2)_4}- & \mathrm{CH} \\ | & & | \\ \mathrm{CO} & & \mathrm{CO} \\ | & & | \end{array}$$

(Asp + Lys)

2. Secondary valence linkages (non-covalent linkage)

a. Hydrogen bridge linkages between peptide groups or between side chains and peptide groups

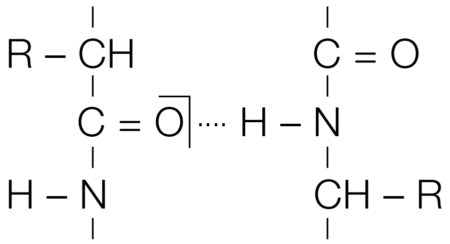

$$\begin{array}{ll}
R-CH & C=O \\
\quad C=\overline{O}|\cdots & H-N \\
H-N & CH-R
\end{array}$$

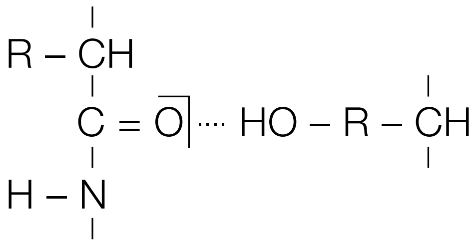

$$\begin{array}{ll}
R-CH & \\
\quad C=\overline{O}|\cdots & HO-R-CH \\
H-N &
\end{array}$$

b. Ionic linkage between charged side chains (formation of electrovalent salt bridges)

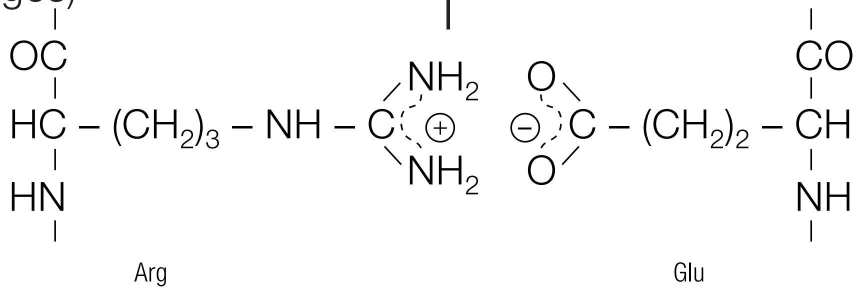

$$\begin{array}{lll}
OC & & CO \\
HC-(CH_2)_3-NH-C\langle^{NH_2}_{NH_2}\oplus & \ominus\,^{O}_{O}\rangle C-(CH_2)_2-CH & \\
HN & & NH
\end{array}$$

c. Hydrophobic (non-polar) bridge linkages between hydrocarbon side chains

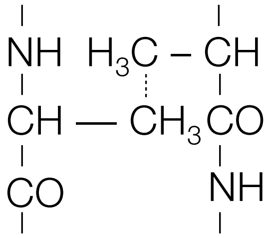

$$\begin{array}{ll}
NH & H_3C-CH \\
CH-CH_3 & CO \\
CO & NH
\end{array}$$

Cross-linking reactions with tanning agents see under chapter “Tanning”.

Physical and chemical properties

1. Collagen

- Whitish, hard and brittle in the dry state.
- Insoluble in cold water and organic solvents.
- Water absorption up to 70 % on the tissue weight; partly deposited in form of water of hydration or capillary water.
- Water vapour absorption up to 50 % on the collagen weight. Decisive advantages over synthetic replacement materials.
- Preservation by dehydration is possible.

- With continuous heating in the presence of water, the fibres shrink to one third of their original length and begin to cement together irreversibly.
- Collagen shows minimum swelling at the isoelectric point.
- Dilute acids and alkalis cause swelling due to the charge, i.e. volume and weight increase owing to higher water uptake (reversible, almost no change in structure of collagen).
  Increase in temperature and concentration and extension of time result in swelling due to hydrolysis (only partially reversible).
- Hydrotropic substances enhance swelling and lower the cementing temperature, the ones with strong polarity render collagen soluble.

2. Keratin

- Characteristic sulfur content of 3 – 5 % (disulfide bridge of cystine).
- Hydrolytically splittable by reduction and oxidation.

$$-S-S- + 2H \rightarrow 2\,-SH$$

Hofmeister or lyotropic series

The Hofmeister or lyotropic series mark the swelling effect of neutral salts on proteins. The effect of the anion is more pronounced than that of the cation.

Cationic series: Calcium – strontium – barium – magnesium – lithium – ammonium – sodium – potassium

Anionic series: Rhodanide – iodide – bromide – nitrate – chloride – acetate – sulfate – thiosulfate

$\longrightarrow$

dehydrating, deswelling, coagulating

$\longleftarrow$

peptising, promoting swelling, dissolving

Proteins of animal skin

1. Globular proteins (ca. 3.5 %)

a. Albumines	removed in beamhouse operations
b. Globulines	
c. Various proteides and melanines	

2. Fibrous proteins

a. Collagen (ca. 98 %)	structural substance for leather making
b. Elastin (ca. 1 %)	
c. Keratin (epidermis, hair)	

Chemical composition of proteins

45 – 55 % carbon
6 – 8 % hydrogen
19 – 25 % oxygen
16 – 19 % nitrogen
0.5 – 2.5 % sulfur, phosphorus, iron, bromine, chlorine

Composition of animal skin

Water	ca.	65	%
Proteins	ca.	33	%
Mineral matter	ca.	0.5	%
Fatty substances		2– 6	% (cattle, calf)
		2–10	% (goat)
		5–30	% (sheep)

Diagram of hide sections

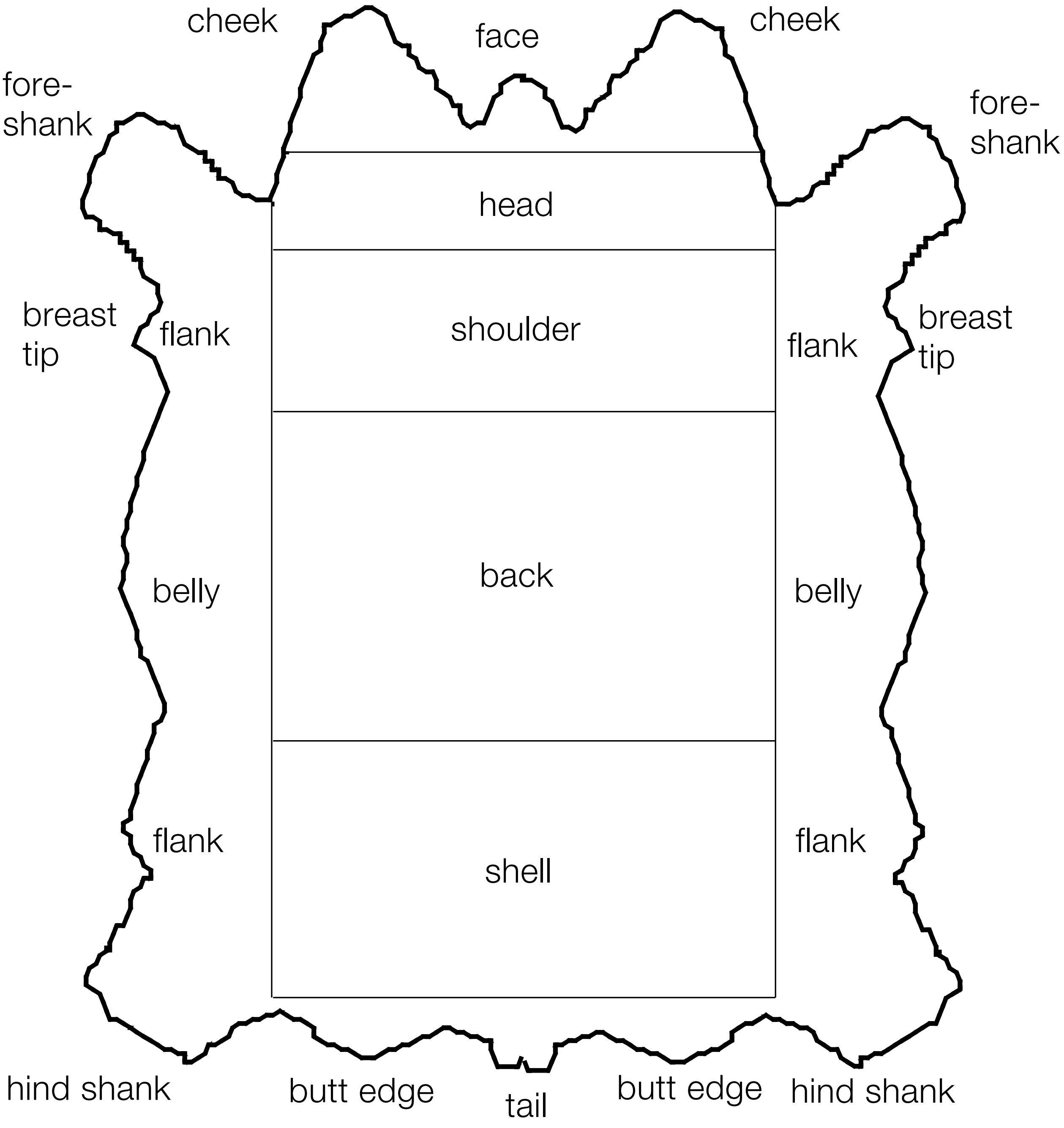

1. Shell, back and butt edge = bend or butt
2. Shoulder, head, cheeks and face = neck
3. Belly, flank, foreshank and hind shank = flank

Diagram of hide sections for the tanner

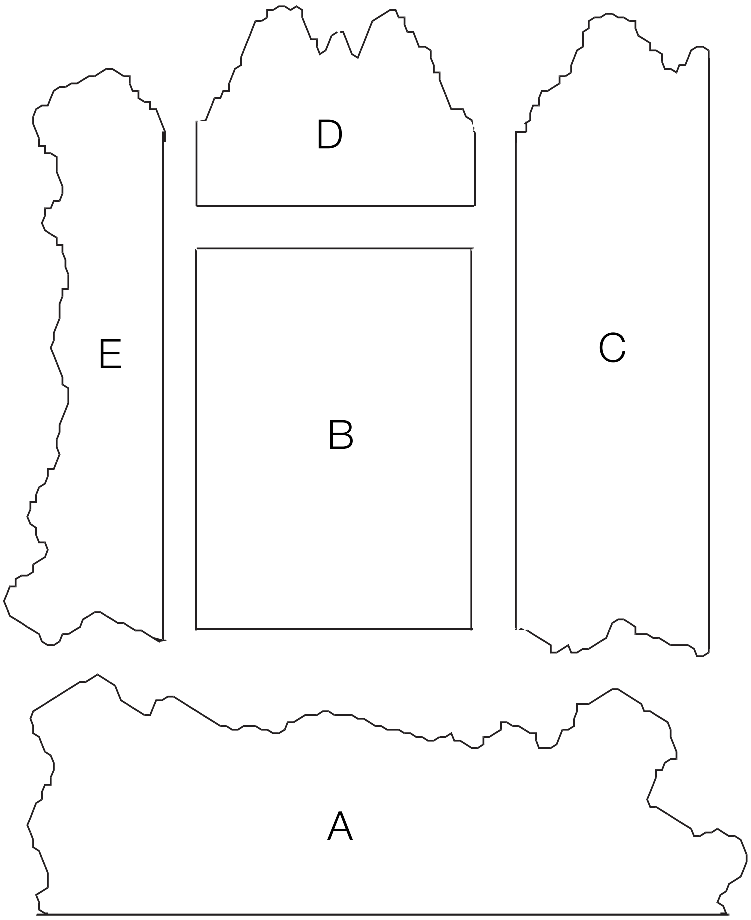

A = Side (half of a whole hide)
B = Butt (half of a butt = bend)
C = Half back (2 x C = back)
D = Shoulder (including neck and head)
E = Belly (including shanks)

Butt	ca. 45 – 55 %	referring to whole surface area or total weight of hide
Shoulder	ca. 20 – 25 %	
Belly	ca. 20 – 25 %	

Substance of raw hide

Substance = structure of the hide with regard to thickness, fibre strength and fibre texture.

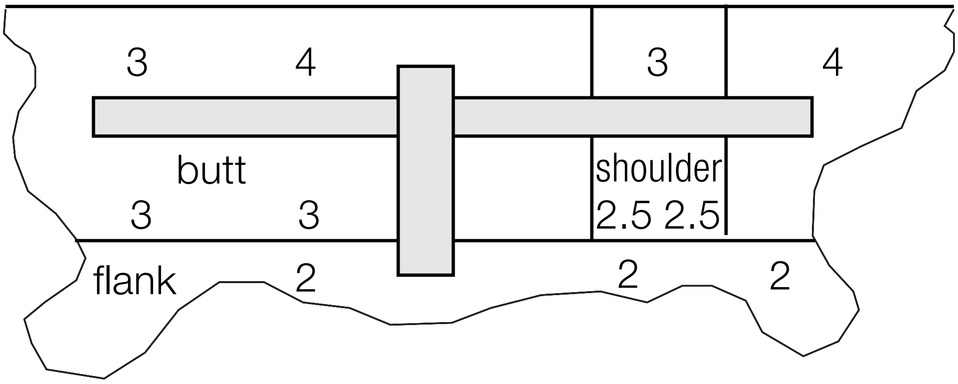

Cow hide = poor substance, thin loose fibre texture (dependent on number of calves produced)

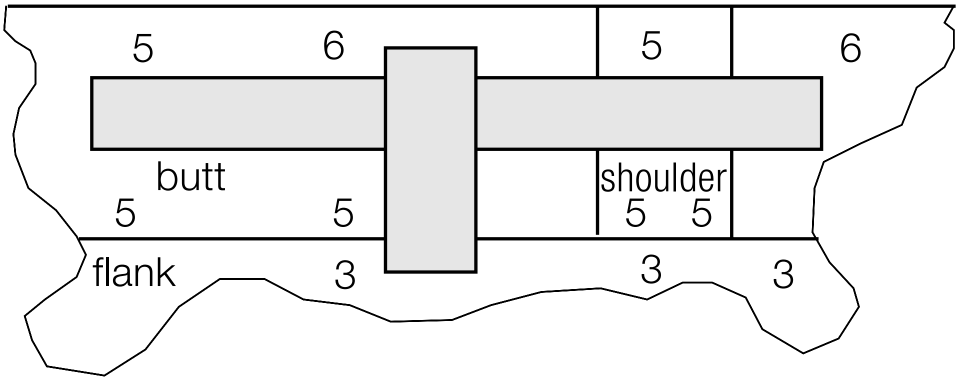

Ox hide = good substance, uniform thickness, tight fibre texture

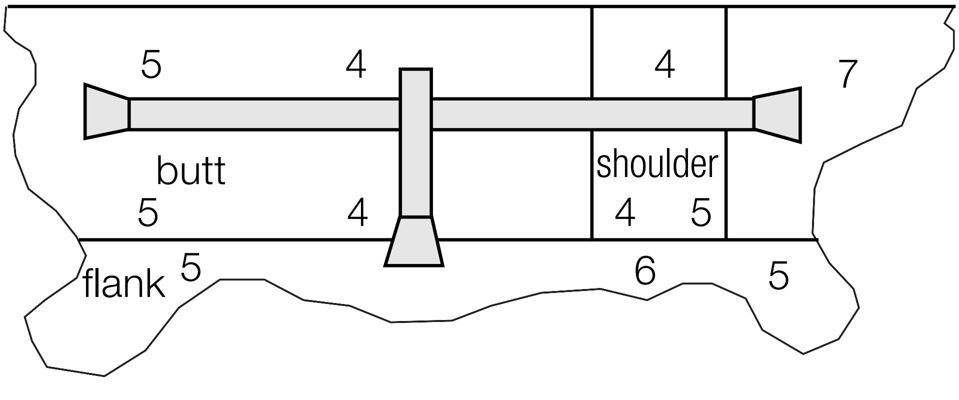

Bull hide = poor substance; loose fibre texture

(The numbers in the sketches indicate the approximate thickness of the hide in mm)

Common rawstock terms

Bastard skins	Sheepskins with goat-like hair structure.
Crust	Light leather which has not been further processed after tanning but has been merely dried out: usually vegetable but sometimes chrome or combination tanned.
Cuirots	Sweated, painted or limed, dried sheep skins.
Culatte	In Germany the rear part of a cattle hide comprising the butt with the side parts (shoulder and upper side parts removed). Sold chiefly in the form of crust leather.
Domestic hides	The hides of cattle reared mostly in stalls.
Kip	The hide of the Southeast Asiatic zebu.
Offal	Shoulder and flank parts cut away from the butt.
Pelt	General term for unhaired skins and hides (after liming and up to tanning). Also applied to shearlings in the raw state.
Pickled pelts	Pelts which have been pretreated with a solution of common salt and acid for tanning with mineral tanning salts. Pelts which have been pretreated with high concentrations of salt and acid are marketed in this form.
Pickled skivers	Thin grain splits of sheep skins which have been treated with a solution of common salt and acid and are marketed in this form.
Slats	Sweated, painted or limed and dried sheep skins.
Wet blue	Term for all chrome tanned and still moist leathers.
Wet white	Chrome-free, pretanned leather.
Wild hides	The hides of wild grazing cattle mainly from South America, Asia, Africa and Australia.

Principal raw hide and skin defects

- **Mechanical injuries**

  Brand marks, barbed wire scratches, holes and scratches caused by thorns, curry-comb scratches. Holes caused by prods and dung forks, injuries caused by horns, holes in the grain caused by sharp awns of plants, chafe marks.

- **Defects caused by diseases**

  Warts, ulcers, skins diseases, damage to the grain and destruction of the tissue by parasitic fungi attack.

- **Damage caused by corrosion**

  Blind grain to rough, open grain caused by the corrosive action of dung and urine.

- **Damage caused by parasites**

  Warble damage, tick marks, hornification and recesses (scab) and holes caused by mites, lice and nematodes.

- **Flaying defects**

  Butcher cuts, grain damage caused by flaying machines.

- **Curing faults**

  Salt stains, putrefaction, discolorations caused by bacteria, mould stains, iron stains, beetle damage, drying defects (cementing, self-splitting).

Commercial classification of hides and skins

A. Cattle hides, calf skins, sheep skins, goat skins

Germany (similar to Switzerland, Austria)

Domestic cattle hides: heifers, cows, oxen, bulls.

Ways of curing:
a. Long-term curing with pure common salt.
b. Short-term curing (marketing of fresh hides) by air-cooling or covering with crushed ice.

Sold by green weight.

Commercial classification: North German hides = lowland breeds
South German hides = highland breeds
Allgäu hides = brown cattle/grey cattle

Weight classes:
up to 14.5 kg
15 – 19.5 kg
20 – 24.5 kg
25 – 29.5 kg
30 – 39.5 kg
40 – 49.5 kg
50 – 59.5 kg
60 kg/plus

Average weight and size: 36 – 39 kg/3.25 – 4.20 m^2 per hide

Grasser skins:
up to 10 kg
10 kg/plus

Calf skins:
up to 4.5 kg (light)
4.5 – 7.5 kg (medium)
7.5 kg/plus (heavy or veal skins)
number of skins over 10 kg in one lot must be specified.

Horse hides: exclusively salted, sold by size (measured from root of tail to ears).

up to 179 cm
180 – 199 cm
200 – 219 cm
220/plus cm

also sold separately as shoulders and shells

Foals: up to 150 cm

Donkeys, mules: 150/plus cm

Sheep skins: Mainly wet-salted and sold by auction.
The wool is from fine to coarse.

Wool skins: 4 – 6 kg
Minimum wool length: long – 6 cm
medium – 4 cm
short – 2 cm

Shearlings and pelts: 2 – 4 kg
(Pelts minimum wool length 1 cm)
“Heidschnucke” (sheep bred in the “Lüneburger Heide”): 3 – 4 kg

Lambskins: small lambs and slinks

Goatskins: exclusively air-dried.

	Average size	Average weight
“Heifer” goatskins	27 – 37 dm²	35 – 50 kg/100 skins
Young goats, female	46 – 55 dm²	50 – 100 kg/100 skins
Female goat skins	55 – 74 dm²	100 – 140 kg/100 skins
Male goat skins	55 – 74 dm²	below 175 kg/100 skins
Male goat skins	65 – 83 dm²	175 – 200 kg/100 skins
Male goat skins	74 – 92 dm²	over 200 kg/100 skins

The skins are sorted into the following classes:	Prima, I a	Sekunda, II a	Tertia III a

Kid skins: exclusively air-dried.

	Average size	Average weight
“Suckling”	18 – 23 dm²	16 – 17.0 kg/100 skins
“Suckling”	23 – 27 dm²	24.0 kg/100 skins
“Springer”	27 – 32 dm²	31.5 kg/100 skins
“Springer”	32 – 37 dm²	33.0 kg/100 skins
“Springer”	37 – 42 dm²	35.0 kg/100 skins

For glove leather, skins of weight classes below 30 kg/100 skins are used.

International rawstock and leather market

Since hides and skins are no longer auctioned, the standard table commonly used in Germany for rating defects in hides and skins has become obsolete.

The International Council of Hides, Skins & Leather Traders' Associations and the International Council of Tanners have issued trade contracts.

a. International Contract No. 6 – Hides and skins

Appendix A: Raw hides and skins (dried, dry- or wet-salted).
Appendix B: Pickled hides and skins, pickled grain hides and splits.
Appendix C: Wet blue hides and skins, wet blue splits.
Appendix D: Chrome, vegetable or other tanned unfinished leathers in the dry or crust state.

b. International Contract No. 7 – Finished leather

These contracts regulate between sellers and buyers all essentials, such as recalculation of weights, quality, amount, freight, shipment, risks, insurance, bills and payments, place of jurisdiction, etc.

The hides and skins are sorted into “prima” and “secunda” according to any major defects determined (grub holes, butcher cuts, etc.). Goods showing serious damage or microbial attack are rejects. Weight corrections are made, if hides or skins have an excessive amount of adhering dung.

Other European countries

Similar to classifications in Germany, but sometimes large differences in weight classes and average weights (in Scandinavia sold by salted weight).

In Eastern Europe no classifications exist that are generally valid. Trade contracts are concluded on individual agreements. The weight classification of cattle hides and calf skin that are intended to be exported to Western Europe is adapted to the standards valid in these countries.

North America

Classification according to place of slaughtering:
1. Big Packers
2. Small Packers
3. Renderers
4. Collectors
5. Country Ware

Exclusively cured by salting and sold by salted weight. Increasingly more wet blue and crust are marketed.
Additional classification:
Native
Branded

Weight classes (cows, steers, bulls):

Light Native Cows	30 – 53 lbs
Heavy Native Cows	53/plus lbs
Branded Cows	30/plus lbs
Ex-Light Native Steers	30 – 48 lbs
Light Native Steers	48 – 58 lbs
Heavy Native Steers	58/plus lbs
Butt Branded Steers	58/plus lbs
Colorado Side Branded Steers	58/plus lbs
Native Bulls	all weights
Branded Bulls	all weights
Country Locker Butcher	all weights
Country Mixed Lots	all weights

Calf skins:	3 – 4 lbs	4 – 5 lbs	5 – 7 lbs
	7 – 9 lbs	9 – 12 lbs	12 – 17 lbs
	17 – 25 lbs		
Partly from packers		up to 9½ lbs	9½ – 15 lbs
West coast	up to 6 lbs	6 – 13 lbs	13 – 15 lbs

South America

(Primarily Argentine – partly quite different standards in the other countries).

Cured by salting, but increasingly green hides are sold.
A small proportion is dried (chiefly Brazil).
Increasingly more wet blue and crust are produced.

Weight classes of salted hides and skins:

Barrigas	(skins of unborn calves with undeveloped hair)	
Nonatos	(unborn calves with developed hair)	under 3.5 kg
Mamones	(milk calves)	3.5 – 7.0 kg
Terneros	(yearlings)	7 – 11.5 kg
Becerros	(calves)	
Extremes		
Vaquillonas	(light cows)	up to 18.0 kg
Vacas	(cows)	18/plus kg
Novillitos	(light oxen)	17 – 23 kg
Novillos	(oxen)	22/plus kg
Toros	(bulls)	18/plus kg

For identification of the origin, the name of the province or countryside is indicated.

Goat and kid skins:

Cabritos	up to 400 g
Cabrillonas	400 – 600 g
Cabras	over 600 g
Chivos jovenes	less than 1000 g
Chivos	over 1000 g

North Africa

Primarily Morocco, Algeria, Tunisia

Curing: salted, dry-salted and mainly dried.
Wet blue and crust are also marketed.

Cattle hides, calf skins (green weight):

Calf skins	1 – 6 kg	average	4 – 5 kg
Grassers	6 – 12 kg	average	9 – 10 kg
Light hides	13 – 20 kg	average	18 kg
	20 – 24 kg	average	22 – 23 kg
	25/plus kg	average	28 – 30 kg

Dry-salted ca. 33 % lighter.

Goat and kid skins:

			Average
Kids	2 – 4 kg	per dozen (dry-salted)	3 kg
	4 – 9 kg	per dozen (dry-salted)	6 – 7 kg
Light goats	7 – 12 kg	per dozen (air-dried)	
Light goats	8 – 13 kg	per dozen (dry-salted)	
Medium goats	13 – 17 kg	per dozen (dry-salted)	
Heavy goats	17 – 22 kg	per dozen (dry-salted)	

Sheep and lamb skins (dried) – average values:

Milk lambs	7 – 18 kg per dozen
Small lambs	10 kg per dozen
Light lambs	12 kg per dozen
Medium lambs	14 – 16 kg per dozen
Heavy lambs	18 – 20 kg per dozen
Extra heavy lambs	22 – 24 kg per dozen
Shaved sheep skins	13 – 15 kg per dozen
Short wool sheep skins	17 – 19 kg per dozen
Medium wool sheep skins	22 – 24 kg per dozen
Half wool sheep skins	28 – 30 kg per dozen
Long wool sheep skins	32 – 36 kg per dozen

South Africa

Calf skin, cattle hide (Cape hides):

- Cured by wet-salting:

Calf skins	up to 8 lbs
Light hides, kips	up to 40 lbs
Hides	40/plus lbs

- Cured by air-drying

Calf skins	up to 6 lbs	
Hides	12/plus lbs	average 16 – 20 lbs

- Cured by dry-salting:

Calf skins	up to 6 lbs		
Kips	6 – 12 lbs		
Hides	12 – 20 lbs,	20 – 30 lbs,	30/plus lbs

Air-dried goat and kid skins – average:

Heavies	60 lbs per dozen	= 83 – 110 dm^2
Mediums	48 – 50 lbs per dozen	= 65 – 183 dm^2
Lights	36 – 38 lbs per dozen	
Extra Lights	24 – 26 lbs per dozen	
Kids	14 – 18 lbs per dozen	

Also dry-salted Cape goats.

Air-dried sheep and lamb skins:

Super Combings	(wool 2.5 inches +)	10 lbs per skin
Combings	(wool 2.0 – 2.5 inches)	9 – 9½ lbs per skin
Longs	(wool 1.5 – 2.0 inches)	7 – 8 lbs per skin
Medium Merinos	(wool 1.0 – 1.5 inches)	5 lbs per skin
Short Merinos	(wool 0.5 – 1.0 inch)	4.5 lbs per skin

For wool skins:	Shearings, Crossbreds, Coarsewools, Persians, Caraculs. Pelt – average 3 lbs
For gloves:	Western Glovers (fat tail sheep skins) Sheep and goat skins are also available in the form of pickled pelts.

West Africa

Main supply countries: Nigeria, Senegal, Congo, Zaire, Upper Volta, Mali, Niger.
Mainly cured by drying.
Butchers
Ordinaries

Cattle hides (dried, weight classes differ in some regions):
up to 4 lbs
4 – 8 lbs
8 – 12 lbs
12 – 16 lbs
16 – 22 lbs
22/plus lbs

Goat skins (dried, per 100 skins):
90 – 95 lbs
95 – 100 lbs
100 – 110 lbs
105 – 115 lbs

Sheep skins (dried, per 100 skins):

Light	120 – 125 lbs
Heavy	200 – 220 lbs
Medium	150 – 160 lbs

Sheep and goat skins also supplied in pretanned form, and as wet blue.

East Africa

Main supply countries: Sudan, Ethiopia, Kenya, Uganda, Tanzania.

Cattle hides and calf skins (dried):
up to 4 lbs
4 – 8 lbs
8 – 12 lbs
12/plus lbs

Cattle hides and calf skins (salted):

Extra light	13 – 26 lbs	Light	26 – 48 lbs
Medium	48 – 57 lbs	Heavy	57/plus lbs

Goat skins (air-dried): 114 – 116 lbs per 100 skins
Kid skins (air-dried): 55 – 77 lbs per 100 skins

Sheep skins (air-dried): 187 – 210 lbs per 100 skins
165 lbs per 100 skins
120 lbs per 100 skins

Lamb skins, yearlings: 66 – 77 lbs per 100 skins

Asia Minor

Main supply countries: Turkey, Syria, Iraq, Iran.
Mainly sheep and goat skins.

Goat skins (dried):	Kid skins (dried):
60 – 80 kg per 100 skins	25 – 40 kg per 100 skins
100 – 120 kg per 100 skins	40 – 60 kg per 100 skins
120 – 160 kg per 100 skins	

Sheep skins (dried):	Lamb skins (dried):
140 – 160 kg per 100 skins	70 kg per 100 skins
180 – 190 kg per 100 skins	100 kg per 100 skins
190 – 220 kg per 100 skins and sometimes more.	120 kg per 100 skins

Large quantities in form of pretanned skins and pickled pelts.
Pickled pelts: sold in square foot per dozen.
Also wet blue and crust.

China

All hides and skins are cured by drying.

Cow hides (Hankow):	Buffalo hides (Hankow):
up to 6 lbs	10 – 20 lbs
6 – 10 lbs	20 – 30 lbs
10 – 14 lbs	30 – 40 lbs
14 – 20 lbs	40/plus lbs
20 – 30 lbs	
30/plus lbs	

Cow hides (Canton):	Buffalo hides (Canton):
8 – 10 lbs	10 – 15 lbs
10 – 15 lbs	15 – 20 lbs
15 – 20 lbs	20 – 30 lbs
20 – 25 lbs	30 – 40 lbs
25 – 30 lbs	40/plus lbs
30/plus lbs	

Goat skins (dried): sold according to quality, colour and length of hair per skin = ¾ – 1¾ lbs and 1¾ plus lbs (also wet blue and crust).

Japan

	Average size	Average weight
Japanese hides	550 – 600 dm²	35 – 40 kg/hide

India, Pakistan

In the recent decades, both countries have erected modern leather factories in which leathers up to the finished stage are produced increasingly for export. As a result, export of rawstock, wet blue, crust and pretanned leather has decreased or partially stopped.

Cattle hides (dry-salted):

Light kips	10 – 18 lbs	green weight
Medium kips	18 – 28 lbs	green weight
Heavy kips	28/plus lbs	green weight
Light buffalos	25 – 40 lbs	green weight
Medium buffalos	40 – 60 lbs	green weight
Heavy buffalos	60/plus lbs	green weight
Cow calves	4 – 10 lbs	green weight
Buffalo calves	10 – 20 lbs	green weight

Vegetable tanned hides and skins:

Marketed in the classes	Super Prime, Prime, Common
in the selections	Run, IV, V, Inferio V.

Cow hides (per hide):	3 – 3½ lbs	4 – 4½ lbs	5 – 5½ lbs
	6 – 6½ lbs	8 – 8½ lbs	10 – 12 lbs
Cow calves (per skin):	¾ – 1 lbs	1 – 1¼ lbs	1¼ – 1½ lbs
	1½ – 2 lbs	2 – 2½ lbs	
Buffalo hides (per hide):	3 – 3½ lbs	4 – 4½ lbs	4½ – 5 lbs
	5 – 5½ lbs	11 – 12 lbs	13 – 14 lbs
Buffalo butts (per butt):	6 – 7 lbs	7 – 8 lbs	8 – 9 lbs
Buffalo calves (per skin):	1½ – 2 lbs	2 – 2½ lbs	

Wet blue and crust are also available (sold by square foot).

Rawstock

Goat skins (dried, dry-salted):
Well-known types: Bangalore, Amritsar, Patna, Calcutta, Madras, Mozufferpore, Bombay, Dacca.

Sorted for size (dried): 27–30, 30–36, 36–40 inches
Sorted for weight (dried, per 500 skins): 350–375 lbs, 400–450 lbs
Dry-salted (per 100 skins): 140–200 lbs, 200–240 lbs

Goat skins (vegetable tanned):
Marketed in the classes Extra Superfine, Superfine, Prime, Standard
in the selections Run, V, Inferio V.
Weight classes (lbs per dozen):

5½–6 lbs	8–9 lbs	11–12 lbs
15–16 lbs	22–24 lbs	

Goat skins are also marketed in the form of wet blue and crust (per square foot).
A special type of chrome crust leather is offered under the designation "Chromosa".

Sheep skins – rawstock:
A distinction is made between hair sheep (also known as bastards) and wool sheep skins.

Dried rawstock: 160–200 lbs per 100 skins
Pelts: 130–160 lbs per 100 skins
Hair sheep: 200–210 lbs per 100 skins

Sheep skins (vegetable tanned):
A distinction is also made here between hair sheep (also known as bastards) and wool sheep skins.
Marketed in the classes

Hair sheep	Extra Superfine, Superfine, Prime
Wool sheep	Semiprime, Middle Class
Selections	Run, V, Inferio V.

Weight classes in lbs per dozen:

5½–6 lbs	6–7 lbs	7–8 lbs
8–10 lbs	11–12 lbs	

Wet blue and crust are also available (sold by square foot).
A special type of chrome crust leather is available under the designation "Chromosa".

Thailand

Main supply countries of raw salted hide: Australia, USA, New Zealand, Netherlands, China, Vietnam, Japan

Cow hide (imported)	36 – 38 kg/hide
Cow hide (domestic)	20 – 22 kg/hide
Buffalo hide (imported)	30 – 33 kg/hide
Buffalo hide (domestic)	27 – 29 kg/hide
Bull	45 – 48 kg/hide

Indonesia (Java, Sumatra, Bali, Kalimantan, Sulawesi)

Cattle hides (dried Java hides):

Marketed in the classes	up to 3 kg, 3 – 5 kg, 5 – 7 kg, 7/plus kg
in the selections	Prima, Intermedia, Sekunda, Tertia.

The heaviest hides 9 kg = 22 kg green weight.
1 kg dry weight of the class 3 – 5 kg has about 6 square feet of area.

Cattle hide (salted):

Marketed in the classes	20 – 24 kg, 25 – 30 kg

1 kg wet salted has about 1.6 – 1.7 square feet of area

Buffalo hides (dried):

Marketed in the classes	up to 6 kg, 6 – 8 kg, 8 – 10 kg 10 – 13 kg, 13 – 15 kg, 15/plus kg.

Goat skins (dried and toggled):	Sold by length and width, measured from the root of the tail to the end of the neck (shoulder).

Selections:	60 – 69 cm	ca. 15 – 18 kg per 100 skins
	70 – 79 cm	ca. 24 – 28 kg per 100 skins
	80 – 89 cm	ca. 35 – 38 kg per 100 skins
	90 – 99 cm	ca. 48 – 55 kg per 100 skins
	100/plus cm	ca. 62 – 65 kg per 100 skins

1 goat skin of about 750 g dry weight has about 8 square feet of area.
1 goat skin of about 350 g dry weight has about 4 square feet of area.

Goat skins (wet salted):

Selections:	less then 70 cm	ca. 0.6 – 0.8 kg per skin
	70 – 79 cm	ca. 0.8 – 1.0 kg per skin
	80 – 89 cm	ca. 1.2 – 1.4 kg per skin
	90 cm up	ca. 1.4 – 1.6 kg per skin

1 kg wet salted goat skins has about 5.0 – 5.5 square feet of area.

Sheep skins (dried and toggled):
Sold by length and width, measured from the root of the tail to the end of the neck (shoulder).

Selections:	70 – 79 cm	ca. 37 – 38 kg per 100 skins
	80 – 89 cm	ca. 42 – 43 kg per 100 skins
	90 – 99 cm	ca. 55 – 60 kg per 100 skins
	100/plus cm	ca. 85 – 95 kg per 100 skins

Sheep skin (wet salted):

Selections:	70 – 79 cm	ca. 1.2 – 1.4 kg per skin
	80 – 89 cm	ca. 1.4 – 1.6 kg per skin
	90 – 99 cm	ca. 1.6 – 1.8 kg per skin
	100 cm up	ca. 1.8 – 2.0 kg per skin

1 kg wet salted sheep skins has about 5.5 – 6.0 square feet of area

Australia

Cattle hides, calf skins and yearling skins sold in lbs.
Curing: mostly salted (but also dry-salted).
Meatworks = Frigorifico type

Sheep skins (sold in lbs):
Selections: Merino Sheep skins, Comebacks, Fine Crossbreeds, Full and Medium Crossbreeds.
Sorted in various wool lengths.
Partly also supplied in the form of pickled pelts and wet blue.

New Zealand

Main supply country for pickled sheep and lamb skins.
In the recent years, also wet blue and crust as well as local production of finished leathers.

Pickled Sheep skins:
Mainly produced from fresh skins.
They are not sold by weight or area but by grade:
The following terms are used to describe all production grades:

- Run Heavy
- Third Heavy
- Run Light
- Merino
- Fourth sheep

Definition of grade:
The definitions Heavy or Light shall be used to indicate the weight and substance of the skins.
The definition Heavy should apply to a pelt of greater than 2.0 mm thickness with no single pelt of less than 1.7 mm at the mid side position.

– Run Heavy sheep:	A minimum of 100 square feet per dozen.
– Run Light sheep:	A minimum of 96 square feet per dozen.
– Third:	No less than two thirds of an intact sheep pelt.
– Third Heavy:	Defective pelts from Run heavy.
– Merino:	All inquality. This grade will include full pelts containing Merino and lap rib.
– Fourth:	Defective pelts from third.

Pickled lamb pelts
Mainly produced from fresh skins.
Sold also by grade.

Definition of grades:

– First:	minimum of 5 square feet per pelt. Free of fault in main panel.
– Pinhole:	minimum of 5 square feet per pelt. Apart for the defect of pinhole this definition is identical to first.
– Second:	minimum of 5 square feet per pelt. Defective pelts from first and pinhole. No major fault and not more than 5 minor faults.
– Third:	defective from second grade. This grade includes medium or heavy cokle pelts.

- Reject: defective pelts from third. It includes pieces and pelts badly affected by facial eczema.
- Seedy: minimum of 5 square feet per pelt. First, second and pinhole pelts, which contain seed, hole and/or seed scar.
- Ribby: minimum of 5 square feet per pelt. Pelts with medium/heavy rib from neck to butt.
- Merino: all in size. Excessively heavy and lap rib, all grades including seedy pelts.

B. Pig skins

Main supply countries: Eastern Europe, China, Japan, USA, Western Europe (less than 1 %).

Curing: Mainly salted butts, seldom backs (butt with neck) and whole skins (with side parts). Also dried, limed pelts (China).

Average weight of salted butts: 2 – 4 kg (divided into weight classes). Japanese pigskin has an average size of 130 – 140 dm^2 and an average weight of 500 – 600 kg/100 skins.

Peculiarities of pig skin: Hair roots penetrate through the entire cross-section of the skin.

Skins of wild peccary boars of South America: used for the production of glove and garment leather.

C. Fish skins

Types of skins used for leather production: skins of sharks, cods and eels.
Curing: mainly salted. Sold by weight.

D. Reptiles

Crocodile, lizard and snake skins.

Origin: wild-living in the equatorial zones of the earth. Increasingly produced at breeding farms.

Curing: salted, dried. Marketed in some countries as pretanned skins.

Classification: according to width (or per skin), size of scales, pattern and defects are considered.

Marketing in conformance with Washington Agreement on Preservation of Species.

E. Other types of hides and skins

Deer, doe, chamois, antelope, dog, kangaroo, rabbit and seal skins;
elk and camel hides;
ostrich skins.
Sold by weight or per skin or hide.

Total quantities of raw hides and skins processed – world leather production

In principle, all hides and skins of animals (mainly mammals) are suitable for leather making, if they have a sufficiently strength in fibre texture and are large enough to ensure economic production.

Leather is mainly produced from the hides and skins of mammals which are bred for the production of meat and milk. The hides are therefore mainly a side product of cattle breeding and the leather producing industry is a sort of disposal for valuable waste products.

Cattle hide (cattle hides, calf skins):	65 – 70 %
Sheep and lamb skins:	10 – 12 %
Goat and kid skins:	8 – 10 %
Pig skins:	3 – 5 %
Other types of skins:	1 – 2 %
Reptile and fish skins:	below 1 %

Cattle, sheep, goat, pig and horse inventories; production of raw hides and skins

1. World inventory (according to FAO in March 2001)

Cattle	(including calves and water buffaloes)	~ 1519 million
	Asia	~ 634 million
	South America	~ 310 million
	Africa	~ 232 million
	North and Central America	~ 161 million
	Europe	~ 144 million
	Oceania	~ 38 million
Sheep		~ 1048 million
	Asia	~ 408 million
	Africa	~ 243 million
	Oceania	~ 164 million
	Europe	~ 142 million
	South America	~ 75 million
	North and Central America	~ 15 million
Goats		~ 702 million
	Asia	~ 467 million
	Africa	~ 181 million
	South America	~ 22 million
	Europe	~ 18 million
	North and Central America	~ 14 million
	Oceania	~ 1 million
Pigs		~ 928 million
Horses		~ 58 million

2. Global supply of hides and skins in 1995 (Numbers in millions ft^2, according to LMC International LTD. 1997)*

	Cattle	Sheep	Goat
World	8746	2910	1383
North America	1892	24	–
South America	2003	73	80
Europe	2327	768	109
Asia	1712	1321	883
Oceania	372	390	13
Africa	409	334	298

World's largest cattle hide suppliers (according to FAO in March 2001)

	Hides take off
World	290.242.924
China	37.387.400
USA	35.604.000
Brazil	31.600.000
India	23.300.000
Argentina	13.500.000
Russian federation	12.200.000
Australia	8.869.600
Mexico	6.580.000
Ukraine	5.580.000
France	5.430.000
Italy	4.500.000
Germany	4.284.600
Canada	3.925.000
Colombia	3.805.000
New Zealand	3.315.000
Bangladesh	2.956.500
South Africa	2.790.000

* *The slaughtering rates are subject to wide fluctuations. No definite conclusions can be drawn from them about the weight or area of the raw hides and skins produced, because in most statistics the slaughtering rates are not classified into mature and immature animals, calves, lambs and kids.*

Curing and disinfection of raw hides and skins

Purpose of curing

To protect freshly flayed hides and skins from attack by micro-organisms and render them storable for a prolonged period.

Methods of curing

1. Curing by drying

Gradual air-drying by hanging up or stretching out.
Moisture content of air-dried hides ca. 10 – 15 %.

Dried hides lose
- 55 – 60 % in weight
- up to 50 % in thickness,
- up to 12 % in area (by hanging up).

2. Salting (most frequently used at present)

a. Sprinkling with solid salt:

Hides	ca.	30 – 40 % of salt	calculated on green weight
Calf skins	ca.	40 – 50 % of salt	
Salt uptake:		15 – 25 %	
Loss of weight			
– calf skins:		8 – 12 %	
– cattle, cow hides:		11 – 14 %	
– bull hides:		12 – 18 %	
Common additives for denaturing:			
Soda ash:	minimum	3 %	most commonly used
Soda cryst.:	minimum	5 – 6 %	
Sodium sulfate:	ca.	5 – 10 %	

b. Brining:
Suspension in brine and subsequent sprinkling with dry salt.

c. Dry-salting:
Combination of salting and drying or predrying first and then salting and final drying.

3. Curing by pickling:

   Mainly for dewoolled sheep skins and skivers but also for unhaired cattle hides and goat skins. Treatment with salt and acid.

   Amounts required: 12 – 15 % common salt } calculated on
   1.5 – 2 % sulfuric acid } pelt weight

4. Short-time curing without using salt:

a. By overspraying the hides with or dipping them immediately after flaying in Protectol KLC 50, if necessary in conjunction with nonionic emulsifiers (3 – 5 days).
b. By placing the flayed hides (washed or unwashed) between slices of ice in container pallets (1 – 2 days).
c. Curing the hides by hanging them up in cold stores (about 14 days at 3 °C).

Disinfection

Bactericides and fungicides are used to inhibit bacteria and mould growth in soaking liquors and vegetable tan liquors, and on pickled pelts and wet leathers.

Water

Principal substances contained in water

a. Dissolved gases
Carbon dioxide, oxygen, nitrogen.

b. Readily soluble salts
Chlorides of sodium, potassium, calcium and magnesium and magnesium sulfate.

c. Sparingly soluble salts and oxides
Hydrogen carbonates and bicarbonates of calcium and magnesium; calcium sulfate, silicium, aluminium and iron compounds.

d. Organic substances

e. Suspended solids

Water hardness

The amount of calcium and magnesium compounds dissolved in the water. According to DIN 19640 the content of alkaline earth ions. The unit by which water hardness is measured is the milligram equivalent per litre (mval/l).
1 mval/l = 1 mmol/Z.
(Z = absolute value of the electrochemical valence of alkaline earth ions).

Total hardness (TH)

α	α
Temporary or carbonate hardness (CH)	Permanent or noncarbonate hardness (NCH)
Consists of: calcium- and magnesium-hydrogen carbonates (= bicarbonates) and -carbonates.	Consists of: calcium- and magnesium-chlorides, -sulfates, -silicates, -nitrates and -humates.

Rating of water according to total hardness

0 – 4 German degrees of hardness = very soft water
4 – 8 German degrees of hardness = soft water
8 – 12 German degrees of hardness = medium soft water
12 – 18 German degrees of hardness = fairly hard water
18 – 30 German degrees of hardness = hard water
over 30 German degrees of hardness = very hard water

Conversion of degrees of hardness of various countries

1 German degree of hardness (°G)
= 1 part CaO in 100 000 parts water = 10 mg/l
= 0.357 mval/l alkaline earth ions

1 French degree of hardness (°F)
= 1 part $CaCO_3$ in 100 000 parts water = 10 mg/l
= 0.200 mval/l alkaline earth ions

1 English degree of hardness (°E)
= 1 part $CaCO_3$ in 70 000 parts water = 7 mg/l
= 0.285 mval/l alkaline earth ions

10 US degrees of hardness (p.p.m.) (°US)
= 1 French degree of hardness

1 °G = 1.79 °F = 1.25 °E = 17.9 p.p.m. (°US)

p.p.m. = parts per million
= 1 millionth of the volume or weight
= 1 ml per 1000 litres
= 1 mg per 1000 grams (1 kg).

Conversion table for German, English and French degrees of water hardness

German °G	English °E	French °F	German °G	English °E	French °F
0.5	0.62	0.9	6.72	8.38	12.0
0.56	0.7	1.0	7.0	8.75	12.55
0.7	0.87	1.26	7.28	9.1	13.0
0.8	1.0	1.43	7.84	9.8	14.0
1.0	1.25	1.79	8.0	10.0	14.3
1.12	1.41	2.0	8.4	10.5	15.0
1.5	1.88	2.69	8.5	10.63	15.18
1.68	2.1	3.0	8.8	11.0	15.75
2.0	2.5	3.58	8.96	11.2	16.0
2.24	2.8	4.0	9.0	11.25	16.08
2.4	3.0	4.3	9.5	11.88	17.0
2.5	3.13	4.48	10.0	12.5	17.9
2.8	3.5	5.0	10.08	12.6	18.0
3.0	3.7	5.37	10.4	13.0	18.6
3.2	4.0	5.73	10.5	13.13	18.78
3.36	4.2	6.0	10.64	13.3	19.0
3.5	4.38	6.27	11.0	13.75	19.68
3.92	4.9	7.0	11.2	14.0	20.0
4.0	5.0	7.17	11.5	14.38	20.59
4.47	5.6	8.0	11.76	14.7	21.0
4.5	5.63	8.06	12.0	15.0	21.5
4.8	6.0	8.6	13.0	16.25	23.27
5.0	6.25	8.95	14.0	17.5	25.06
5.04	6.3	9.0	15.0	18.75	26.85
5.5	6.88	9.85	16.0	20.0	28.64
5.6	7.0	10.0	17.0	21.25	30.43
6.0	7.5	10.74	18.0	22.5	32.22
6.16	7.68	11.0	19.0	23.75	34.01
6.5	8.13	11.64	20.0	25.0	35.8

Water softening

1. By heating	Hardness due to carbonates is reduced to about 2 German degrees of hardness.
2. By precipitation and separation	With lime or caustic soda: hardness due to carbonate is reduced to about 2 German degrees of hardness. With soda: total hardness is reduced to 1 – 2 German degrees of hardness.
3. By ion exchange resins	With permutites, phenolic resin bases: complete desalting is achieved in most cases.
4. By complexing agents	With polyphosphates or organic polyacids, e. g. Trilon types: total hardness is removed.

Amounts of various softening agents required

For removing 1 German degree of hardness, the following approximate amounts are required per litre:

10 mg calcium oxide 11 – 13 mg hydrated lime	for removing temporary hardness due to $Ca(HCO_3)_2$
19 mg soda ash	if calcium sulfate is present
10 mg calcium oxide + 19 mg soda ash	if magnesium sulfate is present
121 mg Trilon A Liquid 170 mg Trilon B Liquid 80 mg Trilon B Powder 66 mg Trilon BD 330 mg Trilon BVT	complete softening is possible

Trilon types for complexing

	Used for:
Trilon A Liquid Trilon AS Trilon B Liquid Trilon B Powder Trilon BD Trilon BS Trilon L Liquid	softening, masking, improving stability, dissolving precipitates of hardness forming chemicals
Trilon BVT Trilon FE	Specific iron(III)-binding capacity

pH ranges for complexing with the effective substance of Trilon B and Trilon BS

1 g sodium ethylenediamine tetra-acetate or
0.77 g ethylenediamine tetra-acetic acid can bind
independent of temperature:

mg	Name	Metal ion valence	Chem. symbol	pH range	Colour of the complexes
64	Magnesium	II	Mg^{++}	8 – 12.5	colourless
105	Calcium	II	Ca^{++}	8 – 13.5	colourless
230	Strontium	II	Sr^{++}	8 – 13.5	colourless
361	Barium	II	Ba^{++}	10 – 13	colourless
167	Copper	II	Cu^{++}	1.5 – 11.5	blue
				5 – 13**	
172	Zinc	II	Zn^{++}	4 – 13	colourless
296	Cadmium	II	Cd^{++}	3.5 – 13	colourless
144	Manganese	II	Mn^{++}	5 – 11	colourless
				5 – 13*	
147	Iron	II	Fe^{++}	1 – 12.5*	colourless
155	Cobalt	II	Co^{++}	4 – 12	red**
				4 – 13.5*	violet***
154	Nickel	II	Ni^{++}	1.5 – 13	blue
545	Lead	II	Pb^{++}	2 – 13.5	colourless
71	Aluminium	III	Al^{+++}	2.5 – 13.5	colourless
138	Chromium	III	Cr^{+++}	1.5 – 5	violet
147	Iron	III	Fe^{+++}	1 – 5.5	yellow
550	Bismuth	III	Bi^{+++}	1 – 9	colourless

* *in the presence of a reducing agent*

** *at room temperature*

*** *when heated (retains the colour after cooling)*

Water consumption in leather production

The amounts required vary considerably, depending on the type of leather to be produced: for 100 kg salted weight between 1.5 and 12.0 m^3 water.

a. Vegetable tannage:	3 – 6 m^3 water
b. Chrome tannage:	7 – 12 m^3 water
Modern processes:	Recycling, partial recycling of water, discontinuous rinsing operations ca. 1.5 – 4 m^3 water.

Water suitable for leather production

Soaking:	Moderate hardness is harmless; high content of suspended matter or of putrefactive bacteria is undesirable.
Liming:	Hard water is harmless for white lime and sulfide lime liquors, but should not be used for enzyme lime liquors.
Washing after liming, deliming and bating:	High content of carbonate is likely to cause lime blasts and the enzymatic effect is impaired in bating.
Pickling, chrome tannage:	Hard water is harmless.
Vegetable tannage:	Hard water and iron content is harmful; calcium and magnesium salts cause formation of insoluble tannin compounds; iron content gives rise to grey or blue discolorations.
Dyeing, fatliquoring:	Soft, iron-free water should be used.

Vessels for the beamhouse

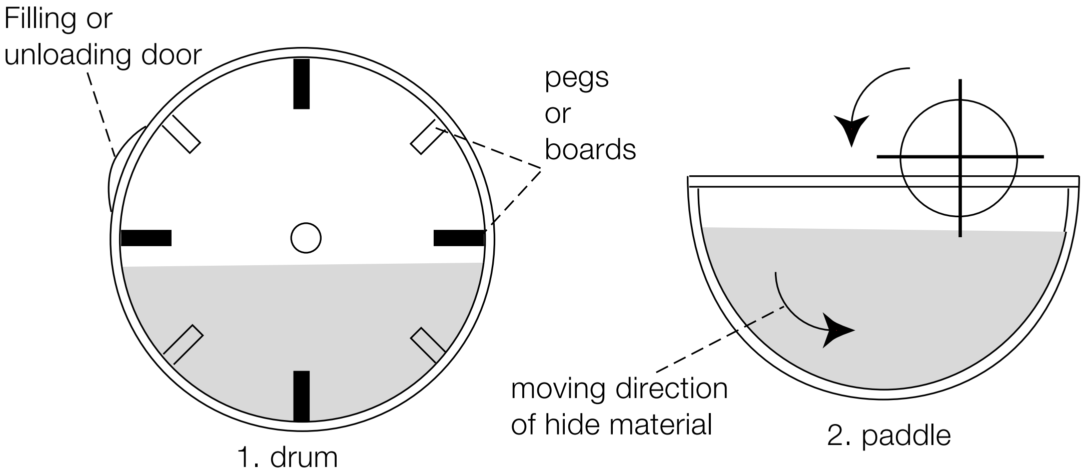

1. drum

2. paddle

Conventional vessels for the beamhouse

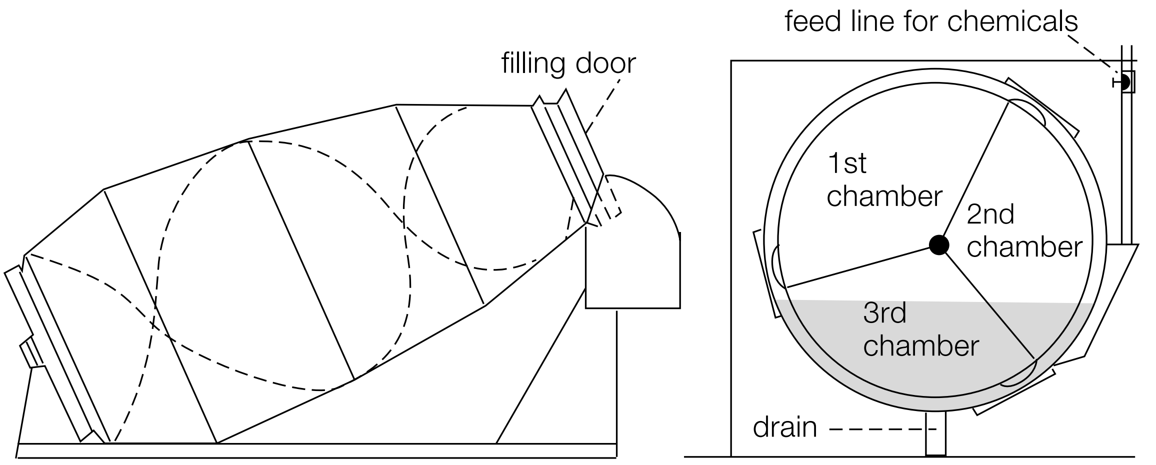

3. mixer

4. Y-drum (washing machine type)

Novel vessels for the beamhouse

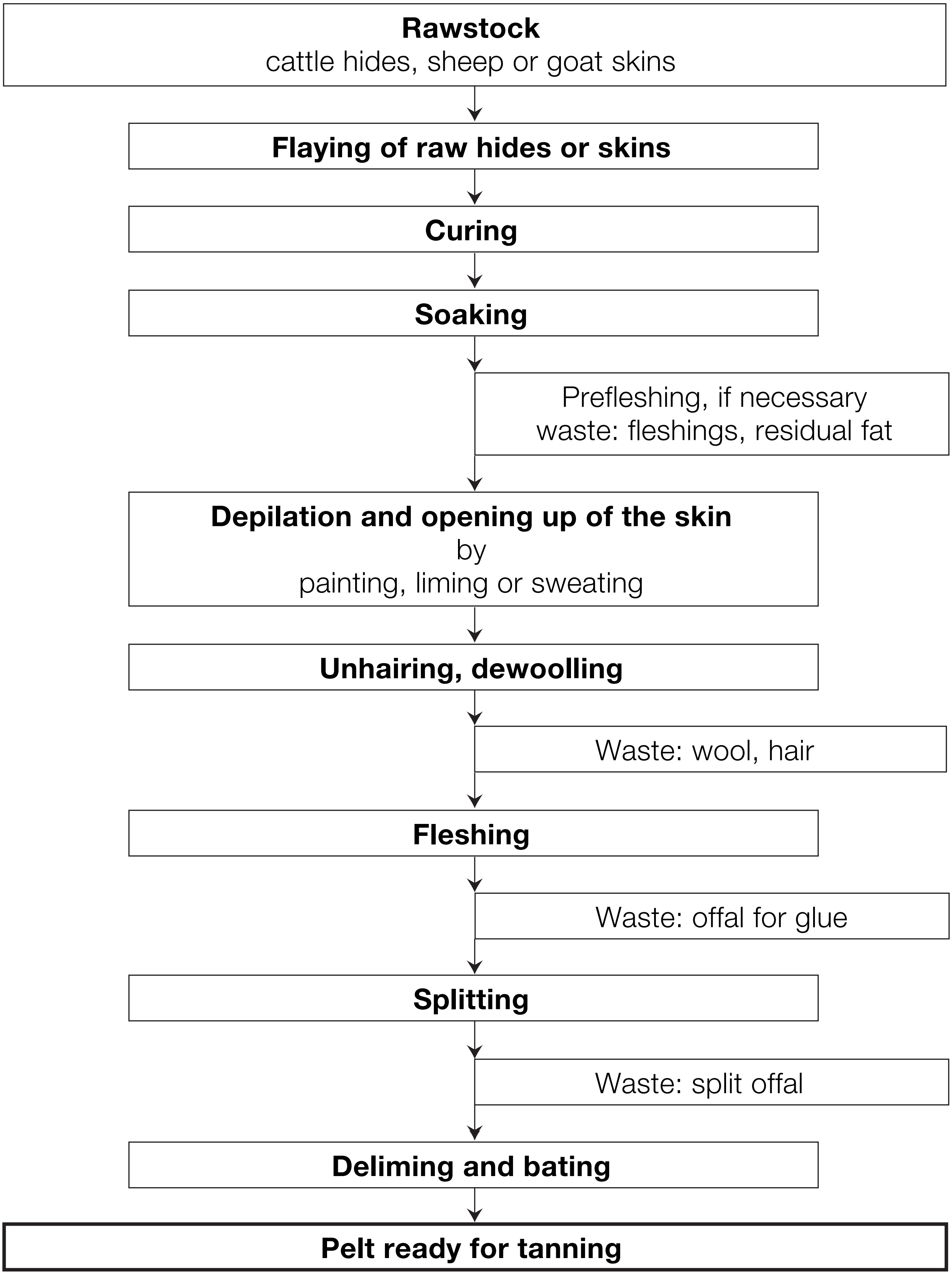
Rawstock
cattle hides, sheep or goat skins
Flaying of raw hides or skins
Curing
Soaking
Prefleshing, if necessary
waste: fleshings, residual fat
Depilation and opening up of the skin
by
painting, liming or sweating
Unhairing, dewoolling
Waste: wool, hair
Fleshing
Waste: offal for glue
Splitting
Waste: split offal
Deliming and bating
Pelt ready for tanning

Soaking

Purpose

Restoring the natural swollen condition of the skin and removal of dirt, soluble proteins and curing agents.

Procedure

a. Soaking pits (mainly used for pre-soaking dried skins)

b. Paddle (careful soaking of delicate skins in long floats)

c. Drum (most commonly used method; mainly for heavy hides).
Y-drums and mixers have lately also come into use.

Methods of accelerating soaking

a. Mechanical treatment
Dry-drumming, breaking.

b. Temperature increase
Temperature of soaking bath may be increased up to 28 °C. Higher temperatures cause undesirable degradation of protein substance.

c. Sharpening with alkalis
- Mainly used for dried skins.
- Commonly used chemicals: sodium sulfide, sodium hydroxide, sodium tetrasulfide, soda ash, Mollescal BW/soda ash.
- Amounts required: 0.3 – 2.0 g per litre soaking liquor.
- The pH of the float should not exceed 10.5 to 11.0, as otherwise undesirable swelling of the skin is likely to occur.
- Do not use alkalis for:
coated raw skins (insoluble magnesium hydroxide),
dried sheep skins (wool is attacked),
fur skins (risk of hair loosening).

d. Sharpening with acidic chemicals
  - Mainly used for dried skins.
  - Commonly used chemicals: Decaltal types, formic acid, bisulfite solution, sodium bisulfite.
  - Amounts required: 0.5 – 10 g per litre soaking liquor.
  - pH of float not below 4.5, as otherwise undesirable swelling of the skin will occur.

e. Common salt addition
  - For dried and fresh skins.
  - Amounts required: not more than 5 g/l, as otherwise swelling is inhibited.

f. Addition of soaking auxiliaries and wetting agents
  - Most common and safest method for all types of raw skins for accelerating soaking.
  - Amounts required: 0.2 – 2.0 g per litre soaking liquor.

g. Additions of enzymatic products like Basozym S 20
Fast soaking in 4 hours is possible, pH has to be adjusted with soda at 10.0 – 10.2 at the beginning to reach end pH of about 9.5.

BASF soaking auxiliaries

Basozym S 20	Enzymatic soaking auxiliary for green and salted raw stock. Activity ca. 2000 LVU/g, self-regulating pH.
Mollescal HW	Soaking auxiliary. Can be applied in hair-saving and hair-pulping processes. Prevents the hair roots from being immunized and enables hairs to be removed more easily.
Mollescal BW	Soaking auxiliary. Accelerates the soaking process. Can be used for salted and dried hides. Offers adequate protection against bacterial attack.
Mollescal C Conc.	Soaking auxiliary with a biocidal action. Especially appropriate for dried hides.
Eusapon S	Wetting agent. Reduces the surface tension of water, protects against bacterial attack and degreases hides.
Eusapon W	Low-foaming surfactant used to speed up the soaking of salted and dried skins. Can also be used in paddles.

Depilation and opening up the skin

Purpose

Removal of hair or wool and epidermis. Other effects obtained: loosening up of the collagen fibre texture and partial saponification of the natural grease (= opening up of the skin and liberation of tanning-active groups.)

The most commonly used depilation and liming methods

1. Lime painting methods

a. Painting on the flesh side (by hand or machine). Diffuse from the flesh side to the hair roots and loosen the hair or wool without seriously attacking it. Used for skins with valuable hair or wool.
Reliming is generally necessary to open up the skin.
Depilitants: sodium sulfide, sodium hydrosulfide, sodium tetrasulfide, Mollescal SF.
Concentration: ca. 8 – 15 °Bé.
Consistency-regulating materials: hydrated lime, kaolin, chalk, starch, dextrin, Corial Binder AS.
Total density: ca. 22 – 28 °Bé
Amounts required: 130 – 150 litres lime paint per 1000 kg hides or skins.

b. Painting on the grain side
For special types of rawstock to produce a particularly smooth and fine grain. (The hair is completely destroyed).

c. Drum painting
The lime paint is allowed to act first in a very short float and subsequently in an extended float (transition to drum liming).

2. Liming methods

a. Pure sulfide lime liquor
Hair is destroyed (poor opening up of the skin). For leathers with very flat, closed grain (glazed kid).
Liming chemicals: sodium sulfide, sodium hydrosulfide.
Concentration: ca. 2 – 6 °Bé.

b. Pure white lime

Hair loosening (strong opening up of the skin). Mainly used for reliming and seldom for long liming of soft leathers (gloving).
Liming chemicals: hydrated lime powder (calcium hydroxide). Seldom slaked lime (lime paste).
Concentration: 4 – 6 g hydrated lime powder per litre of lime liquor.

c. Combined sulfide and hydrated lime liquor

Most commonly used liming process.
Guiding formulation for lime liquors:

120 – 400 %	water
2.0 – 4.0 %	sodium sulfide conc., if required in combination with sodium hydrosulfide
1.0 – 5.0 %	hydrated lime powder

d. Oxidative liming

Hair loosening is effected by the action of chlorine dioxide.
Poor opening up of the skin. (Seldom used method.)
Liming chemicals: sodium chlorite in conjunction with acid.

3. BASF low pollution liming systems

a. Mollescal SF or Mollescal MF liming system

Organic liming systems. Compared to inorganic sulfide systems, the Mollescal liming systems yield increased leather area and improved strength and grain properties (smoothness, tightness of grain, full flanks). Any residual Mollescal SF or Mollescal MF is oxidised by atmospheric oxygen and, therefore, no harmful substances are transferred into the effluent.
Liming chemicals: Mollescal SF or Mollescal MF in conjunction with hydrated lime and, if necessary, pre-treatment with Mollescal HW or BW.
Amounts to use: 3 – 6 % Mollescal SF/Mollescal MF in short floats (amounts depending on hair length). In long floats (paddle), addition of 0.5 – 0.7 % sodium sulfide or appropriate amounts of hydrosulfide is necessary.

b. BASF hair-saving liming system

Controlled immunisation of the hair by alkali (hydrated lime, sodium sulfide/hydrosulfide), if pre-treatment is carried out in a slightly alkaline soak with Mollescal LS. Subsequently, the loosened or slightly attacked hair is filtered off.

Advantages regarding effluent: considerable reduction of COD value, sulfide content, and nitrogen load as well as amounts of sludge and effluent volume.

Quality improvement of pelt and leather: better loosening of scud, lower natural grease content, more uniform uptake and distribution of chrome as well as improved level-dyeing properties.

4. Enzymatic processes

a. Cold and warm sweating

Putrefaction process brought about deliberately. Hair-loosening is effected by formation of enzymes and ammonia.

Now seldom used method.

b. Enzymatic liming

Hair-loosening is effected by addition of specific enzymes like Basozym L 10, which attacks the prekeratin of the roots. By this, it effects a better scud loosening and attack of the epidermis. Alkaline preplumping or reliming is necessary.

Chemicals for depilation and liming

1. Calcium hydroxide

Starting product is quick lime (CaO), which is converted into slaked lime ($Ca(OH)_2$) with water.

Nowadays, mainly slaked lime is used in the form of hydrated lime powder (no expenses for slaking; uniform and more accurate proportioning).

1 part quick lime is equivalent to about 3 parts slaked lime.
1 part quick lime is equivalent to 1.1 – 1.3 parts hydrated lime powder.

Density and lime content of milk of lime at 15 °C

°Bé	g CaO per litre	°Bé	g CaO per litre
1	7.5	16	159
2	16.5	17	170
3	26.0	18	181
4	36	19	193
5	46	20	206
6	56	21	218
7	65	22	229
8	75	23	242
9	84	24	255
10	94	25	268
11	104	26	281
12	115	27	295
13	126	28	309
14	137	29	324
15	148	30	339

Solubility of lime at various temperatures

°C	g CaO per litre	g $Ca(OH)_2$ per litre
0	1.30	1.72
10	1.25	1.66
15	1.22	1.62
20	1.18	1.56
25	1.13	1.49
30	1.09	1.44
40	1.00	1.32
50	0.92	1.21
60	0.82	1.08
80	0.66	0.88
100	0.52	0.69

Increasing the solubility of lime by addition of sugar (molasses, glucose)

Addition of % sugar	g $Ca(OH)_2$ per litre (20 °C)
0	1.56
0.5	1.88
1.0	2.05
1.5	2.30
2.0	2.73
2.5	3.31

2. Sodium sulfide

Sodium sulfide flakes 60 %, iron-free (best quality product)

• Na_2S content:	ca. 60 %
• Available sulfur:	ca. 25 %
• Water of crystallization:	ca. 40 %
• Iron content (Fe):	less than 0.0008 % (practically iron-free). High iron content – in low quality products – may cause iron sulfide stains on raw-stock that still contains blood.

Other available forms:

Na_2S conc. block:	60 – 66 % Na_2S
Na_2S cryst. ($Na_2S \cdot 9\ H_2O$):	30 – 33 % Na_2S

Concentrations above 3 g Na_2S/litre destroy the hair.

Density in °Bé and concentration of sodium sulfide conc.
(approximate values)

°Bé	g Na_2S conc. per litre
1	12
2	23
3	35
4	46
5	58
6	69
7	81
8	92
9	104
10	115
11	127
12	138
13	150
14	161
15	173

3. Sodium hydrosulfide

Sodium hydrosulfide flakes, technically iron-free

• NaHS content:	ca. 70 %
• Na_2S content:	ca. < 0.5 %
• Available sulfur:	ca. 40 – 41 %
• Iron content (Fe):	ca. 0.001 % (techn. iron-free)

Other available forms:
Sodium hydrosulfide liquid: 30 – 35 % NaHS

Has lower alkalinity than sodium sulfide. Used in conjunction with other liming agents to reduce swelling and produce smoother and finer grain.

1 g NaSH (70 %)/litre = pH 9.90
10 g NaSH (70 %)/litre = pH 10.35
100 g NaSH (70 %)/litre = pH 10.80

Density in °Bé and concentration of Sodium hydrosulfide flakes
(approximate values)

°Bé	g NaSH flakes per litre
1	15.5
2	32
3	48
4	65
5	82
6	99
7	127.5
8	150
9	180
10	209
11	229
12	241
13	269.5
14	301
15	333.5

Strength relation of sodium sulfide conc. and sodium hydrosulfide flakes

Parts sodium sulfide conc.	Parts sodium hydrosulfide flakes
0.25	0.15
0.50	0.31
0.75	0.46
1.00	0.61
1.25	0.77
1.50	0.92
1.75	1.03
2.00	1.23
2.25	1.38
2.50	1.55
2.75	1.70
3.00	1.84
3.25	2.01
3.50	2.16
3.75	2.32
4.00	2.47
4.25	2.62
4.50	2.77
4.75	2.93
5.00	3.04

Liming and painting auxiliaries

1. Products for improving the liming effect

Mollescal AB	Liming auxiliary. Prevents pelts from swelling during liming and gives cleaner pelts. Promotes the penetration of lime and prevents the accentuation of growth marks.
Mollescal LS	Auxiliary for use in hair-saving and hair-pulping liming processes. Loosens hair and reduces swelling. Enables the COD and sulfide content of the effluent to be reduced. Performs well in combination with Basozym L 10.
Mollescal MF	Liming auxiliary free of amine and sodium sulfide that can be used in conventional hair destroying and hair-saving liming processes. It effects very clean, smooth pelts. Excellent results are obtained by combination with the soaking and liming enzymes of the BASF range. Pelts limed with Mollescal MF are the ideal basis for all types of leather.
Mollescal PA Liquid	Dispersing agent for liming chemicals. Solubilizes lime, improves penetration, opens up the skin and prevents the accentuation of growth marks.
Eusapon S	Excellent emulsifying capacity for natural skin greases. Reduces formation of fat stains, gives cleaner pelts.

2. Products for increasing lime swelling

Common salt	Effective when used in low concentration, i. e. below 5 %.
Sodium hydroxide	= caustic soda, caustic soda solution.

3. Products reducing swelling

Calcium chloride

4. Thickening agents for lime paints

Kaolin, hydrated lime, chalk, starch, potato or rice starch, dextrin, special polymer dispersions, such as **Corial Binder AS** = polyacrylate.

5. Products for increasing the solubility of hydrated lime

Mollescal PA Liquid, molasses and glucose (sugary matter).

6. Lubricants

Mollescal AGN	Slip agent used to reduce the friction between pelts and the walls of the drum. Helps to prevent chafe marks and false backbones from forming when limed, unhaired pelts are rinsed.

7. Products used in hair-saving liming systems to prevent immunisation of hair roots and fixation of short hair.

Mollescal HW	Soaking auxiliary. Can be applied in hair-saving and hair-pulping processes. Prevents the hair roots from being immunized and enables hairs to be removed more easily.
Mollescal MF	The liming auxiliary is added in hair-saving liming processes before the lime. It penetrates into the hair bulb and loosens the hair, which avoids the risk of immunisation of the roots.
Basozym L 10	Enzymatic liming auxiliary. Can be applied in hair-saving and hair-pulping processes on all types of raw stock. Loosens hair roots, helps to open up the skin and makes hair and melanin easier to remove. Activity ca. 1000 LVU/g. Very effective in combination with Mollescal LS, Mollescal MF or Mollescal AB.

Deliming

Purpose

Removal of mechanically deposited and chemically bound lime and of capillary lime by conversion into readily soluble salts.

BASF deliming agents

Decaltal A-N	Nitrogen-free deliming agent that makes sulfides easier to remove by catalyzing their oxidation and contributes to increased safety. Penetrates thick pelts quickly and assists in the bating process on account of its weak hydrotropic action.
Decaltal ES-N Liquid	For nitrogen-free deliming at pH > 8. Pelts are very clean and pale in colour. Has a weak degreasing action.
Decaltal N/ Decaltal N Liquid	Deliming agents with a complexing action, based on non-swelling acids. Used to dissolve lime deposits and to clean pelts. Can also be used in pickling.
Decaltal R	Very high dissolving capacity for lime. Especially recommended for deliming unsplit hides quickly in short floats.
Bascal S	Mixture of dicarboxylic acids. Promotes the action of other deliming agents. Can also be used without a float or in short floats.

Definition of deliming value, buffering capacity, lime dissolving value

Deliming value = amount of deliming agent in g necessary for neutralising 1 g calcium hydroxide.

Buffering capacity = titration according to deliming value with normal caustic soda solution from pH 8.5 to pH 10.5.
Difference = measure of buffering capacity.

Lime dissolving value = percentage of calcium hydroxide dissolved by the deliming agent according to the deliming value.

Product	Deliming value ca.	Buffering capacity ca.	Lime dissolving value ca.
Decaltal A-N	3.6	26.5	54.5
Decaltal ES-N Liquid	1.6	–	–
Decaltal N	1.7	15.5	28.0
Decaltal N Liquid	4.5	14.6	30.0
Decaltal R	1.7	18.3	62.5
Bascal S	1.8	0.2	100.0

Strength comparison of BASF deliming agents

1 part product α corresponds to γ	Decaltal A-N	Decaltal ES-N Liquid	Decaltal N	Decaltal N Liquid	Decaltal R	Bascal S
Decaltal A-N	–	1.0	0.6	1.5	0.6	1.0
Decaltal ES-N Liquid	1.0	–	0.6	1.6	0.6	1.0
Decaltal N	1.6	1.6	–	2.6	1.0	1.0
Decaltal N Liquid	1.5	1.5	0.4	–	0.4	0.4
Decaltal R	1.0	–	1.0	2.6	–	1.0
Bascal S	1.0	1.0	0.9	2.5	0.9	–

Amounts of deliming agent required for neutralizing 1 kg CaO

3.515 kg	hydrochloric acid (37 %)
1.825 kg	sulfuric acid (96 %)
1.930 kg	formic acid (85 %)
4.280 kg	acetic acid (50 %)
7.465 kg	lactic acid (43 %)
2.210 kg	boric acid (100 %)
3.710 kg	sodium hydrogen sulfite (100 %)
1.910 kg	ammonium chloride (100 %)
2.350 kg	ammonium sulfate (100 %)

Other deliming agents

Product	Effect	Properties and use
Hydrochloric acid	strong deliming acid	Forms peptising $CaCl_2$. Danger of acid swelling. Only for superficial deliming.
Sulfuric acid	strong deliming acid	Forms sparingly soluble $CaSO_4$. Risk of stain formation and acid swelling. Only for superficial deliming.
Formic acid, acetic acid	strong deliming acids	Deliming effect similar to that of mineral acids. Less risk of acid swelling. Salts formed have a slight buffering effect.
Lactic acid	strong deliming acid	Milder deliming effect due to the presence of anhydrides and lactates. Finer grain.
Boric acid	weak deliming acid	Good penetration. Fixed lime is not completely removed. Fine grain.
Sodium hydrogen sulfite	weak deliming acid	Deliming and bleaching effect at the same time.
Ammonium chloride	weak deliming acid	Conversion of $Ca(OH)_2$ into less plumping NH_4OH and formation of peptising $CaCl_2$.
Ammonium sulfate	weak deliming acid	Forms $CaSO_4$ which remains in solution in sufficiently large amounts of float.

Bating

Purpose

Further loosening and peptising of the fibre texture of the skin and elimination of alkali-swelling with the aid of specific enzymes.

Enzymes in bating agents

Enzymes are biological catalysts that accelerate the reactions without themselves being modified. Enzymes, which act specifically on proteins, are called proteases.

The following proteases are used as bating agents:
1. Pancreas proteases (trypsin)
2. Mould fungus proteases
3. Bacteria proteases

Bating agents with pancreas proteases (mainly used) develop their optimum effect in slightly alkaline pH range (8.0 – 8.5).
Composition:
Enzymes, wood flour as carrier substance, ammonium salts, neutral salts as buffering and deliming agents.

Bating agents with mould fungus proteases develop their best effect at pH 3.5 – 5.0, and bating agents with bacteria proteases at pH 6.0 – 7.2. The buffering substances in these bating agents are among others sulfites and bisulfites.
Commercial bating agents may contain a mixture of all three types of proteases.

Influencing the bating effect

Temperature: The rate of enzymatic reaction increases with rising temperature.
Bating temperature used in practice: 30 – 37 °C.
Higher temperatures cause damage to the skin material.
Neutral salt content: Higher concentrations may reduce or inactivate the bating effect.

Rating of bating agents

The enzyme value is the number of enzyme units in 1 g bating agent. One enzyme unit has the fermentative capacity to digest 1.725 mg casein.

Enzyme value = LVU
Enzyme unit = LVU x 1.725

The enzyme unit is determined according to Löhlein-Volhard by allowing the bating agent to act upon an alkaline casein solution. Undigested casein is precipitated with hydrochloric acid and sodium sulfate. The alkali consumption in re-titration is a direct measure of the enzymatic effectiveness of the bating agent.

This titration method was recently supplemented by a photometric method with trinitrobenzene sulfonic acid (Tegewa method). Almost all liberated amino groups are also detected after hydrolysis by proteolytic enzymes.

Pancreas-based bating agents mainly used in practice:
1. Weak bating agents (technical leather, harness leather) = 500 – 1000 LVU
2. Medium strong bating agents (upper leather, lining leather, fancy leather) = 1000 – 1500 LVU
3. Strong bating agents (glove, clothing leather) = 1500 – 2000 LVU

BASF bating agents

Basozym C 10	Bating agent based on pancreatic enzymes for use on all types of leather. Activity ca. 1000 LVU/g.
Basozym CS 10	Special enzyme preparation for opening up small skins and fur skins in acid media. Activity ca. 900 LVU/g.
Basozym 1000	Universal bating agent for all types of raw stock and all types of leather. Activity ca. 1000 LVU/g.

Degreasing

Degreasing methods

1. Wet degreasing of pelts and moist leathers

a. Squeezing out under high pressure.

b. In drums with wetting agents or emulsifiers.

c. In drums with fat solvents in combination with wetting agents or emulsifiers.

d. Treatment with solvents in drums (economical only with redistillation).

2. Dry degreasing of leather

a. Treatment with solvents alone in special degreasing plants with redistillation of the solvent.

b. For cleaning leather clothing in special machines (dry cleaning) with solvents and, if necessary, specific detergents known as solvent soaps (surfactants).

Degreasing temperatures

1. For pelts = 35 – 38 °C
2. Moist vegetable/synthetic tanned leather = 40 – 45 °C
3. Moist chrome leather = 60 – 70 °C

The most commonly used degreasing agents*

Product	Boiling point °C	Density g/cm^3
Diethyl ether (ether)	34– 35	0.714–0.716
Light fractions		
Gasoline	30– 85	0.665–0.670
Petroleum ether	40– 60	0.645–0.655
Intermediate fractions		
Extraction gasoline	80–125	0.710–0.735
Wash gasoline	100–140	0.735–0.750
Heavy fraction (white spirit)	140–200	0.780–0.790
Kerosine	150–270	0.730–0.810
Decalin	188–193	0.873–0.887
Tetralin	205–207	0.963–0.973

** Safety and environmental protection rules should be observed.*

BASF degreasing agent

Eusapon S	Nonionic surfactant for degreasing hides and pelts. Can be used with or without solvents.

Pickling of pelts

Purpose

The purpose of pickling is to acidify the pelts to a certain pH before chrome tannage and thus to reduce the astringency of the chrome tanning agents. Pickling is also used for preserving (cf. preservation).

Pickling methods

a. Salt-containing pickling systems
   Minimum common salt concentrations 6 °Bé, normally to be on the safe side 8 – 10 °Bé.
   Amount of acid or acid mixture 1 – 3 %, depending on pH and type of acid.

b. Low salt pickling systems
   Applied only when non-swelling, aromatic acids such as Decaltal N, Picaltal Flakes are used.

c. Short pickling methods
   In salt-containing and low salt pickling systems, a float length of 50 – 150 % is used and the chrome tanning agent is added after a pickling time of 1 – 12 hours. When Picaltal Flakes are used, however, processing can be carried out in 20 – 50 % of float and the chrome tanning agent can be added after only 5 – 10 minutes without risk of precipitation or diffusion trouble.

Pickling acids

Product	Density (g/cm^3)	pH (1 : 10) ca.	Notes
Formic acid			
85 %	1.195	1.65	Strong organic acid; masking.
100 %			
Bascal S	–	2.3	Masking; improves chrome exhaustion; well suited for pickling fur skins.
Decaltal N	–	3	Masking; usually applied in combination with strong pickling acids; improve fineness of grain.
Decaltal N Liquid	–	3	
Acetic acid 6 °Bé	1.043	2.15	Weak organic acid.
Lactic acid 80 %	1.197	1.7	Weak organic acid.
Oxalic acid cryst.	–	0.75	Strong organic acid.
Picaltal Flakes	–	0.50	Mixture of aromatic sulfonic acids; masking, filling.
Hydrochloric acid 37 %	1.188	0.20	Strong inorganic acid. No filling effect.
Sulfuric acid conc. 96 %	1.835	0.15	Strong inorganic acid.

Theoretically corresponding parts by weight of various acids and deliming agents

1 part product α corresponds to ca. γ	Formic acid 100 %	Bascal S	Bisulfite soln. 40 °Bé	Decaltal N	Decaltal N Liquid	Acetic acid 6 °Bé	Lactic acid 80 %	Oxalic acid cryst.	Picaltal Flakes	Hydrochlorid acid 37 %	Sulfuric acid 96 %
Formic acid 100 %	–	1.4	6.0	4.2	5.2	3.9	2.8	1.3	3.1	2.1	1.0
Bascal S	0.7	–	4.1	2.9	3.6	2.7	1.9	0.9	2.2	1.5	0.7
Bisulfite soln. 40 °Bé	0.2	0.3	–	0.7	0.8	0.7	0.5	0.2	0.5	0.4	0.2
Decaltal N	0.3	0.4	1.4	–	1.2	0.9	0.7	0.3	0.7	0.5	0.3
Decaltal N Liquid	0.2	0.3	1.1	0.8	–	0.8	0.5	0.3	0.6	0.4	0.2
Acetic acid 6 °Bé	0.3	0.4	1.5	1.1	1.3	–	0.7	0.3	0.8	0.5	0.3
Lactic acid 80 %	0.4	0.5	2.2	1.5	1.9	1.4	–	0.5	1.1	0.8	0.4
Oxalic acid cryst.	0.8	1.1	4.5	3.1	3.9	2.9	2.1	–	2.4	1.6	0.8
Picaltal Flakes	0.3	0.5	1.9	1.3	1.6	1.3	0.9	0.4	–	0.7	0.3
Hydrochloric acid 37 %	0.5	0.7	2.8	2.0	2.4	1.9	1.3	0.6	1.5	–	0.5
Sulfuric acid 96 %	1.0	1.4	5.6	4.0	4.9	3.7	2.6	1.3	3.0	2.0	–

Amount of 1 N NaOH used in titrating solutions

up to pH 7.0 in ml	4.45	6.45	26.6	18.6	23.0	17.5	12.3	5.95	14.0	9.45	4.7

Tanning and retanning

Purpose of tanning

To bring about irreversible stabilization of the skin substance that is prone to putrefaction. The object of converting pelt into leather by tanning is to

- stabilize it against enzymatic degrading and increase its resistance to chemicals,
- raise its shrinking temperature and increase its resistance to hot water,
- reduce or eliminate its ability to swell,
- enhance its strength properties,
- lower its density by isolating the fibres,
- reduce its deformability,
- reduce its shrinkage in volume, area and thickness,
- enhance the porosity of its fibre texture.

These effects are achieved by cross-linking the collagen chains with various tanning agents.

Cross-linking reactions between skin substance and tanning agents (schematic)

a. Vegetable tanning materials and synthetic replacement tanning agents:

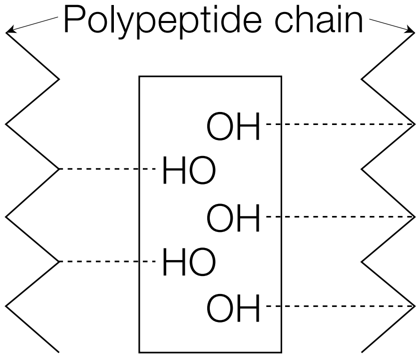

Cross-linking is effected by secondary valences through hydrogen bridges with the phenolic OH groups of the tanning agent molecule.

b. Mineral tanning agents; example: chrome tanning agent

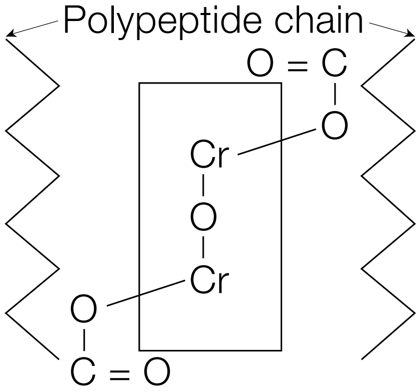

Cross-linking is effected by principal valences through coordinative bonds (complex bonds) with the COOH groups of the collagen.

c. Aldehyde tanning agents; example: glutaraldehyde

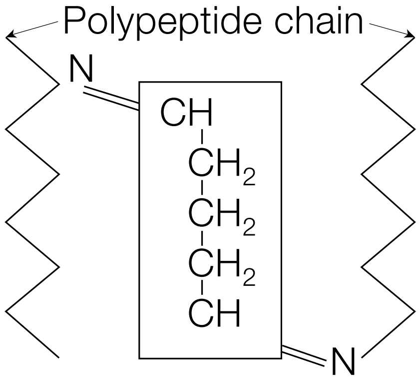

Cross-linking is effected by principal valences through atomic bonds (covalences) by reaction of the aldehyde and the NH_2 groups of the collagen.

d. Synthetic auxiliary tanning agents

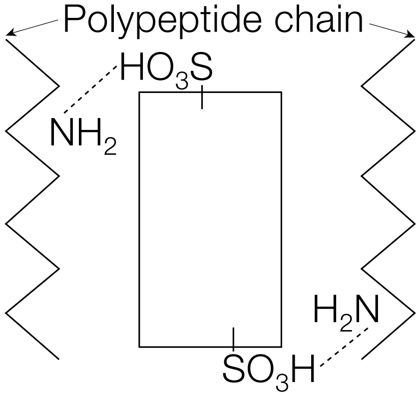

No cross-linkage but secondary valence linkage by electrovalent salt bridges (ion bonds) of the sulfonic acid groups with the NH_2 groups of the collagen.

Shrinking temperature of hide and leather

Material	Shrinking temperature	Maximum practical use temperature (wet or moist)
Skin		
a. Mammal collagen fibre	62 – 64 °C	37 – 38 °C
b. Fish collagen fibre	40 – 45 °C	25 – 30 °C
Pelt	40 – 60 °C	37 – 38 °C
Leather		
Chamois leather	65 – 70 °C	40 °C
Alum tanned leather	70 – 75 °C	45 °C
Vegetable tanned leather	70 – 85 °C	45 °C
Formaldehyde leather	80 – 85 °C	50 °C
Glutaraldehyde leather	75 – 85 °C	50 °C
Aldehyde/aluminium leather	80 – 90 °C	55 °C
Chrome leather	100 °C	60 – 80 °C

Tanning methods

1. Vegetable tannage

a. Pit tannage
b. Accelerated tannage
c. Rapid tannage (BASF RAPITAN process)

2. Mineral tannage

a. Chrome tannage (wet blue tannage)
b. Aluminium tannage
c. Zirconium tannage

3. Other tannages

a. Aldehyde tannage (wet white tannage)
b. Oil tannage (chamois)
c. Immergan A tannage

4. Combination tanning methods

The above tanning methods are used in various combinations with one another and in different intensities to produce special leather properties. The dominating tanning method generally determines the final leather character.

Vegetable tanning is one of the oldest tanning methods, and it is still the first choice for the production of some special types of leather e. g. sole leather. Yet the most important tanning method today is chrome tanning. Approximatly 80 % of the leather produced world wide are chrome tanned. Nowadays an increasing amount of leather, especially automotive leather, is tanned with a combination of aldehyde and synthetic/vegetable/polymer tanning agents.

Retannages have gained special importance. They enable production to be carried out on an industrial scale and improve the use value of modern types of leather. Syntans, resin and polymeric tanning agents are applied in retanning processes to adjust the character of the leather and improve its quality.

The classical division of the tanning process in Tanning γ Neutralization γ Retanning is valid only for mineral tanning processes, as the low pH after tanning has to be raised to allow an even distribution of the retanning materials (vegetable, synthetic, polymeric tanning agents). In purely organic tannages with vegetable tanning agents, syntans, aldehydes and polymers a strict distinction between tanning and retanning is no longer possible.

Amounts of tanning agents required for various types of leather
(Percentages on the pelt weight)

1. Vegetable/syntan tanned leathers	
Sole leather	33 – 40 % pure tan
Insole leather	25 – 30 % pure tan
Combination tanned bottom leather	30 – 33 % pure tan
Harness and technical leather	28 – 30 % pure tan
Bag and upholstery leather	20 – 25 % pure tan
Upper leather	20 – 25 % pure tan
Sheep and goat skins (Light and lining leather)	15 – 20 % pure tan
Skivers	12 – 18 % pure tan
2. Mineral tanned leather	
Chrome tanned leather	1 – 4 % Cr_2O_3
Aluminium tanned leather	1 – 8 % Al_2O_3
3. Aldehyde leather	2 – 8 % aldehyde
4. Chamois leather	25 – 40 % fish oil

Vegetable tanning

Structure of vegetable tanning agents

Vegetable tanning materials

α α

Hydrolysable tanning materials (Pyrogallol)	Condensable tanning materials (Catechol)
(Acid-forming)	(Phlobaphene-forming)
Oak wood	Quebracho
Chestnut wood	Hemlock bark
Myrobalans	Mimosa bark
Valonea	Oak bark
Trillo	Uranday wood
Sumac	Tizera wood
Dividivi	Mangrove
Galls	Gambir
Acorn galls	Cutch
Tara	

Pine bark (mixture of pyrogallol-catechol)

Vegetable tanning materials

Vegetable tannins derived from:
1. Barks, 2. Woods, 3. Fruits, 4. Leaves, Growths, 5. Roots

Abbreviations:
t = tans, nt = nontans, sm = sugary matters, is = insolubles
(amounts indicated in ca.%)

1. Barks

Oak bark (Central Europe)	t nt sm is	10.0 (8 – 17) 5.5 2.6 71.0	Gives firm and full leather; yellow-brown colour with dark cut. Usually applied as dusting material.
Pine bark (Central Europe)	t nt sm is	12.0 (7 – 20) 7.0 – 9.0 5.0 65.0	High sugar content and, therefore, strongly acid-forming. Gives yellow-brown leather with reddish cut; becomes darker.
Hemlock bark (Northern USA, Canada)	t nt sm is	10.0 (7 – 18) 8.0 – 10.0 – 65.0 – 70.0	Gives pronouncedly reddish leather. Only of local importance.
Chestnut bark (Southern Europe)	t nt sm is	12.0 (10 – 18) 7.0 5.0 64.0	Similar in properties to oak bark.
Mangrove bark (Tropical sea coasts)	t nt sm is	36.0 (16 – 50) 12.0 (9 – 15) 1.0 – 2.0 40.0 – 46.0	Gives reddish leather. Highly sludging. Spongy leather. Of little importance.
Mimosa bark (South Africa, Australia)	t nt sm is	36.0 (22 – 48) 7.5 2.0 (1 – 4) 42.0	Gives pale leather with reddish tinge. Good solubility, nonsludging. Leather darkens on exposure to light.
Bagaruwa (West and Central Africa)	t nt is	30.0 – 35.0 11.0 – 14.0 45.0 – 50.0	Gives pale and medium firm leather. Only of local importance.

Maletto bark (Australia)	t nt sm is	42.0 (35 – 56) 8.0 2.0 36.0	Readily soluble; gives yellowish leather colour that grows more reddish. For all types of leather.
Acacia negra (Brazil)	t nt sm is	40.0 (30 – 47) – – –	Similar in tanning effect to mimosa bark, but gives a somewhat darker leather colour.
Birch bark (North America, Europe, Russia)	t nt sm is	12.0 (7 – 18) 5.0 – 9.0 3.0 – 5.0 70.0 – 75.0	Strongly acid-forming. Gives medium firm yellow-red leather. Only of local importance.
Willow bark (Northern Europe, Russia)	t nt sm is	10.0 (7 – 14) 4.0 – 7.0 2.0 70.0 – 75.0	Gives mild, pale leather. Only of local importance. For genuine Russian leather.
Redunca bark (Australia)		only for extracts	Also called myrtan extract. High sugar content and, therefore, acid-forming.
Bablah (babool) (India, Pakistan)	t nt sm is	30.0 – 35.0 12.0 – 15.0 – 40.0 – 45.0	Only of little local importance. Resistant to lime water.

2. Woods

Oak wood (Central Europe)	t nt sm is	6.5 (4 – 10) 1.5 – 2.0 1.3 – 1.5 70.0 – 80.0	Strongly acid-forming. For firm leather. Normally used in combination with other tanning materials.
Chestnut wood (Southern Europe)	t nt sm is	9.0 (6 – 15) 1.0 – 2.0 0.6 – 1.2 65.0 – 70.0	Gives firm leather of pale colour. Bloom-forming.
Quebracho wood (South America)	t nt sm is	20.0 (14 – 26) 1.5 – 2.0 0.1 – 0.3 61.0	Reddish leather colour, growing darker. Sludging, rapid tanning action, imparts weight.

Urunday wood (South America)	t nt sm is	14.0 (11 – 16) 1.0 – 3.0 – 65.0	Cannot be distinguished analytically from quebracho; gives somewhat firmer leather and higher yield.
Tizera wood (North Africa, Sicily)	t nt sm is	20.0 – 22.0 2.0 – 3.0 – 60.0 – 63.0	Similar to quebracho wood. Of little importance.
Cutch wood (India, East Africa)		only for extracts	Very rapid tanning action. Gives soft leather of dark colour. Of local importance only.

3. Fruits/Pods

Algarobilla (Central and South America)	t nt sm is	43.0 (35 – 52) 18.0 – 22.0 6.0 – 8.0 21.0 – 25.0	Gives soft and mild leather of yellow-brown colour. Bloom-forming.
Dividivi (Central and South America)	t nt sm is	42.0 (25 – 50) 15.0 – 19.0 8.0 – 10.0 25.0 – 28.0	Strongly acid-forming. Gives spongy, offshade leather. For combination tannages. Bloom-forming.
Myrobalans (India, South East Asia)	t nt sm is	35.0 (25 – 48) 14.0 – 17.0 5.0 – 8.0 20.0 – 40.0	Strongly sludging. Mainly for combination tannages. Gives soft leather.
Tara (Teri) (South America, India)	t nt sm is	35.0 – 56.0 15.0 – 22.0 – 10.0 – 33.0	Gives soft and pale leather. At present mainly used for automotive and upholstery leather due to high light- and heat-resistancy.
Valonea, Trillo (South Eastern Europe, Asia minor)	t nt sm is	20.0 – 50.0 8.0 – 13.0 3.0 – 4.0 33.0 – 47.0	Gives tough, pale and firm leather with dark cut. Bloom-forming.

4. Leaves, growths

Galls (China, Japan, Turkey, North Africa)	t	60.0 – 77.0	Of no importance for tanning; for production of tanning acid.
Gambir (India, China, South East Asia)		only for extract	Extract sparingly soluble. Gives soft, pale, extensively lightfast leather.
Acorns (Yugoslavia, Hungary)	t nt sm is	30.0 7.5 0.5 – 1.0 46.0 – 50.0	Gives tough, firm leather of brown-grey colour.
Sumac leaves (Mediterranean countries)	t nt sm is	28.0 (22 – 35) 14.0 – 15.0 4.0 – 5.0 48.0 – 50.0	Gives soft and supple leather of pale colour. High lightfastness. For fancy leathers.

5. Roots

Badan (Russia)	t nt	17.0 – 20.0 18.0 – 21.0	Of little local importance (extract production).
Canaigre (Mexico, Algeria)	t sm	18.0 – 25.0 3.0 – 6.0	Of little importance (tanning material of American Indians).
Taran, Kermek (Russia, Turkey)	t nt sm	16.0 – 22.0 9.0 – 11.0 2.0 – 5.0	Of little local importance.

Vegetable tannin extracts (liquid, solid, powder)

Abbreviations:
t = tans, nt = nontans, is = insolubles, w = water, a = ash,
tts = tans in total solubles
(Percentages indicated are approximate values)

		°Bé	t	nt	is	w	a	pH	tts
Pine bark									
extract	– liquid	20	30 (16 – 34)	16	1.5	53	3 – 4	4.3	65
	– powder	–	54 (52 – 57)	33	3.0	10	2.5	4.3	62
Mimosa (bark)									
extract	– liquid	25	35 (27 – 46)	11	0.5	54	3.5	5.0	76
	– solid	–	63 (58 – 70)	16	1.0	20	3.0	5.0	80
	– powder	–	75 (70 – 78)	18	1.0	7	2.5	5.0	81
Mangrove (bark)									
extract	– liquid	24	32 (28 – 36)	8	1.0	59	2.5	5.4	80
	– solid	–	58 (56 – 70)	17	1.0	25	5.0	5.4	78
	– powder	–	75 (70 – 78)	18	0.5	7	3.5	5.4	81
Redunca (myrtan)									
extract	– solid	–	60 (60 – 70)	20	10	10	4.5	4.0	75
Oak wood									
extract	– liquid	25	27 (20 – 39)	13	0.5	60	2.5	3.5	67
	– solid	–	61 (57 – 68)	21	1.0	17	2.5	3.5	74
	– powder	–	73 (65 – 75)	21	1.0	5	2.5	3.5	78
Chestnut wood									
extract	– liquid	27	34 (22 – 46)	9	0.5	56	0.5	3.3	79
	– solid	–	66 (50 – 81)	12	0.4	22	1.5	3.3	84
	– powder	–	73 (65 – 83)	21	0.2	6	1.5	3.3	78
Tara									
extract	– liquid	–	75 (67 – 83)	12-19	0.5 – 5.3	4 – 8	–	3.4 – 3.9	–
	– powder	–	63 (58 – 68)	22	0.5 – 0.8	3 – 9	4 – 7	3.2 – 3.6	72
Quebracho ordinary									
extract	– liquid	22	35 (30 – 40)	3	3.0	59	0.5	5.0	90
	– solid	–	65 (57 – 74)	5	8.0	22	1.0	5.0	93
Quebracho sulfited									
(hot-soluble)	– solid	–	72 (68 – 76)	8	0.0	20	4.0	5.5	90

Vegetable tanning

		°Bé	t	nt	is	w	a	pH	tts
Quebracho sulfited									
(cold-	– solid	–	70 (65 – 73)	11	0.0	19	6.0	6.0	86
soluble)	– powder	–	82 (78 – 84)	8	0.1	10	4.5	5.5	91
Myrobalans									
extract	– liquid	22	26 (24 – 30)	9	1.0	64	1.5	3.0	74
	– solid	–	60 (57 – 65)	16	2.0	22	3.0	3.0	79
	– powder	–	70 (68 – 74)	18	2.0	8	3.0	3.0	80
Valonea (valex)									
extract	– liquid	25	30 (24 – 34)	8.5	0.5	61	2.0	3.8	78
	– powder	–	68 (58 – 64)	22	0.5	10	5.0	3.8	76
Sumac									
extract	– liquid	26	25 (24 – 30)	13	0.5	61	1.0	4.0	66
	– powder	–	62 (58 – 64)	30	1.0	7	4.5	4.0	68
Gambir blocks									
extract	– solid	–	40 (36 – 51)	14	8.0	38	3.5	4.3	74
Gambir cubes									
extract	– solid	–	50 (48 – 55)	17	12	21	4.5	4.7	75
Cutch									
extract	– solid	–	50 (45 – 52)	23	11	16	–	–	68

BASF products supporting vegetable tanning systems

Bastamol K	Fixing agent used to fix all types of anionic tanning agents. Reduces the water absorption of vegetable-tanned leather and the loss by washing. Enhances the colour of the leather and its perspiration resistance.
Basyntan I/ Basyntan IZ	Tanning agents that can be used to accelerate vegetable tannages and to enhance the colour of the leather. They can increase the yield. Basyntan I: Conc.: B 96 %, pH ca. 3.8 Basyntan IZ:. Conc.: B 92 %, pH ca. 4
Basyntan N	Very appropriate for all types of soft, full leather. Conc.: B 95 %, pH ca. 4
Basyntan RS-3	Pretanning agent applied prior to vegetable tanning. Accelerates the penetration of vegetable tanning agents and gives pale leathers with a fine grain. Conc.: B 96 %
Basyntan TM Liquid	Pretanning agent for lightening the colour of vegetable-tanned leather. Conc.: ca. 45 %
Relugan RV	Very effective in combination with vegetable tanning agents. Speeds up vegetable tanning processes, improves the fullness of the leather and bleaches its colour.
Tamol M/Tamol MB	Dispersing agents used to speed up the uptake and improve the distribution of vegetable tanning agents.

Mineral tanning

Structure of mineral tanning agents

Polybases	Polyacids
=	=
Chrome tanning agents Aluminium tanning agents Zirconium tanning agents	Phosphoric acid tanning agents Silicic acid tanning agents

BASF mineral tanning agents

1. Chrome tanning agents

Chromitan B	Ready-to-use chromium(III) salt, ca. 25 % Cr_2O_3, ca. 33 % basicity.
Chromitan FM	Lightly masked chrome tanning agent with a buffering effect. Uniform composition, alkali-free. Ca. 24 % Cr_2O_3, ca. 40 % basicity.
Chromitan FMS	Self-basifying, lightly masked chrome tanning agent, ca. 24 % Cr_2O_3, ca. 48 % basicity. Gives even cleaner effluent, and enables greater savings in chrome to be made. Less chrome is liberated when leathers are retanned with syntans.
Chromitan MSN	Self-basifying chrome tanning agent. Uniform composition, alkali-free. Ca. 21 % Cr_2O_3, ca. 50 % basicity.

2. Aluminium tanning agents

Lutan BN	Aluminium tanning agent, ca. 16 % Al_2O_3, ca. 50 % basicity.
Lutan FN	Complexed aluminium tanning agent for white leathers and wool skins, ca. 17 % Al_2O_3, ca. 20 % basicity.

3. Zirconium tanning agent

Lutan DZ	Used in retannages for chrome-tanned leathers to reduce their stretchiness and to improve the tightness of the grain without making the grain coarse. Also used to fix water repellents to waterproof leathers.

4. Combination tanning agent aluminium/chrome

Lutan CRN	Aluminium tanning agent containing chrome. For tanning white leathers and retanning chrome-tanned leathers. Promotes the penetration of mineral tanning agents, consolidates the fibre structure, and gives a tighter grain, better response to dyeing and a fine, short nap. Ca. 14 % Al_2O_3, ca. 3.0 % Cr_2O_3; ca. 20 % basicity.

5. Combination tanning agent chrome/syntan

Basyntan E	Synthetic retanning agent containing chrome. Gives leathers with a soft handle and a smooth grain. Levels the shade of dyed leather without lightening it to any extent.

Amounts of mineral tanning agents in % for x% Cr_2O_3 or Al_2O_3

Product	% Cr_2O_3 or Al_2O_3 0.5	1.0	1.5	2.0	2.5	3.0
Chromitan B	1.9	3.8	5.7	7.7	9.6	11.5
Chromitan FM	2.0	4.0	6.0	8.0	10.0	12.0
Chromitan FMS	2.1	4.2	6.3	8.4	10.4	12.5
Chromitan MSN	2.4	4.8	7.2	9.5	11.9	14.3
Chrome alum	3.3	6.6	10.0	13.2	16.4	20.0
Lutan BN	2.2	4.3	6.5	8.7	10.9	13.0
Lutan FN	2.8	5.6	8.3	11.1	13.9	16.7
Lutan CRN (Al_2O_3 + Cr_2O_3)	2.8	5.6	8.3	11.1	13.9	16.7

Other mineral tanning salts

Chrome alum	$KCr(SO_4)_2 \cdot 12\ H_2O$; 15.2 % Cr_2O_3 content. For special one-bath tannages.
Chromium acetate (violet)	$[Cr(H_2O)_6]\ (CH_3COO)_3$; 30 % Cr_2O_3 content. Special aftertreatment dyeing auxiliary (glove leather).
Chromium chloride	$CrCl_3 \cdot 6\ H_2O$; 28.4 % Cr_2O_3 content.
Chromium sulfate	$Cr_2(SO_4)_3 \cdot 18\ H_2O$; 21.2 % Cr_2O_3 content. Starting product for the production of chrome tanning agents.
Potassium dichromate	$K_2Cr_2O_7$; 51.7 % Cr_2O_3 content. Initial product for the production of chrome tanning agents. Toxic product (carcinogenic).
Sodium dichromate	$Na_2Cr_2O_7 \cdot 2\ H_2O$; ca. 50 % Cr_2O_3 content. Initial product for the production of chrome tanning agents. Toxic product (carcinogenic).
Aluminium chloride	$AlCl_3 \cdot 6\ H_2O$; ca. 22 % Al_2O_3 content.
Aluminium sulfate	$Al_2(SO_4)_3 \cdot 18\ H_2O$; 15.3 % Al_2O_3 content.
Potash alum	$KAl(SO_4)_2 \cdot 12\ H_2O$; 10.8 % Al_2O_3 content. Now only of little significance. Product has only low binding stability. For special use in combination with other mineral tanning agents.
Zirconium sulfate	$Zr(SO_4)_2$ or the 50 % basic salt $Zr(OH)_2SO_4$ For special tannages and retannages.

Basicity

The basicity of a mineral tanning agent is the proportion of hydroxyl groups (OH groups) in the molecule, calculated on the total valences of chromium, aluminium or other complexing mineral tanning salts. The tanning power of low basicity products is weak; it is adjusted to the optimum basicity range of 33 % to 66 % by addition of alkalis.

The basicity is specified in
% (percent) = basicity according to Schorlemmer
1/12 (twelfth) = Freiberger basicity (seldom used)

Basicity in percent		Basicity in twelfths
0	=	0/12
8.33	=	1/12
16.66	=	2/12
25.00	=	3/12
33.33	=	4/12
41.66	=	5/12
50.00	=	6/12
58.33	=	7/12
66.66	=	8/12

With increasingly higher basicity, most commercial chrome tanning agents begin to flocculate; unmasked chromium sulfates, for instance, already at a basicity of 50 %. With aluminium tanning salts it is still more difficult to prepare highly basic complex salts.

General formula for calculating the basicity increase

$$\boxed{(x\text{-}a) \cdot \text{g } Cr_2O_3\text{/litre} \cdot \text{factor} = \text{g alkali/litre}}$$

x = basicity desired
a = basicity present

Factors of common alkalis:
soda ash (100 %) = 0.02092
soda crystals = 0.05647
sodium hydrogen carbonate = 0.03316
sodium hydroxide (50 %) = 0.03158
magnesium oxide (water-free) = 0.00796

Basicity increase (general)

(Figures indicate amount of basifier in gram)

With	Increase by	1000 g chromium oxide (Cr_2O_3)	1000 g Chromitan B
Soda ash	1/12	177	45.0
	1 %	20.9	5.4
Sodium bicarbonate	1/12	295	75.5
	1 %	33.2	8.5
Neutrigan	1/12	300	78.0
	1 %	36.0	9.4
Magnesium oxide	1/12	67	17.6
	1 %	8.0	2.1

General formula for determining the basicity reduction

$$\boxed{x \cdot \text{g } Cr_2O_3\text{/litre} \cdot \text{factor} = \text{g acid/litre}}$$

x = basicity reduction desired in%

Factors of most commonly used acids:
sulfuric acid (96 %) = 0.02016
formic acid (100 %) = 0.01817
formic acid (85 %) = 0.02137
hydrochloric acid (37 %) = 0.03890
oxalic acid (100 %) = 0.01777

Basicity reduction (general)

(Figures indicate amounts of acid in gram)

With	Reduction by	1000 g chromium oxide (Cr_2O_3)	1000 g Chromitan B
Sulfuric acid (96 %)	1/12	167.8	43.6
	1 %	20.2	5.2
Hydrochloric acid (37 %)	1/12	323.8	84.2
	1 %	38.9	10.1
Formic acid (85 %)	1/12	177.9	46.2
	1 %	21.4	5.6

Masking of chrome tanning agents

Masking refers to the entering of acid radicals (usually organic acids) into the mainly used chromium sulfate complexes. The properties of the chrome liquors and that of the resultant leather can be influenced by appropriate masking, e. g.:

With regard to the tanning agent:
Reduction of astringency
Increase of the resistance to alkalis (flocculation)
Increase of the penetration rate.

With regard to the leather:
Improvement of fullness
Increase of shrinking temperature
Improvement of grain pattern and smoothness
Modification of handle
Improvement of vertical chrome distribution
Lightening of leather colour.

Masking agents with increasing complex affinity

Chlorate β nitrate β chloride β sulfate β sulfite β rhodanate β

formate β acetate β adipinate β sulfophthalate β

succinate β tartrate β

glycolate β phthalate β sulfosalicylate β maleinate β

malonate β lactate β citrate β resorcylate β oxalate β hydroxide

(Each succeeding anion displaces the preceding one from the chromium complex).

The principal masking agents

Implenal AP	Strongly filling, fine grain.
Implenal DC Liquid	Filling, fine, tight grain. Improves chrome exhaustion and fixation.
Implenal DN	Like Implenal DC Liquid with additional buffering effect.
Bascal S	Improves chrome exhaustion in tan bath.
Decaltal N	Filling, bleaching, fine grain.
Neutrigan	Filling, fine grain. Can inhibit the formation of Cr(VI).
Sodium formate	Fine grain, improves penetration of tanning agents.
Calcium formate	Less fine grain, accelerates penetration of tanning agents.
Sodium acetate	Pale leather colour, gives comparatively flat leathers.
Sodium bisulfite	Filling, less fine grain.
Sodium sulfite	Filling, green leather colour.
Polymethaphosphate	Filling, fine grain.

Reduced chrome liquors prepared from potassium or sodium dichromate

Principle

Potassium and sodium dichromate are salts of hexavalent chromium and have no tanning effect. They are reduced with reducing agents in the presence of mineral acids to chromium(III) salts that possess tanning properties.

Precautionary measures in preparing chrome liquors

All soluble chrome(IV) compounds are liver and kidney poisons and may be carcinogenic. Very strict safety measures have to be observed in handling dichromates, e. g. the wearing of protective clothing, work-gloves, workshoes and respirators to protect against dust and spray mists.

Principal reducing agents

Inorganic products:	sulfur dioxide (gaseous), sodium thiosulfate, sodium hydrogen sulfite, sodium sulfite.
Organic products:	glucose, cane or grape sugar, molasses, sulfite waste liquor, sawdust or chrome shavings.

Theoretical calculation of basicity of reduced chrome liquors (Schorlemmer)

$$\boxed{B = 133.3 - S}$$

B = basicity, S = kg sulfuric acid for 100 kg potassium dichromate

Amounts of products required for preparing reduced chrome liquors

According to practical experience, the following amounts of reducing agents and acids are required for preparing a chrome liquor of 33.3 % basicity (Schorlemmer):

Per 100 kg sodium or potassium dichromate

+ 30 kg glucose (technical grade)
+ 95 – 100 kg sulfuric acid conc.
or
+ 35 kg molasses
+ 90 – 100 kg sulfuric acid conc.
or
+ 110 – 130 kg sodium thiosulfate
+ 80 – 90 kg sulfuric acid conc.
or
+ 70 – 75 kg sulfur dioxide (gaseous)

Depending on the concentration desired, the amount of water required varies between 250 and 500 litres.

The degree of masking of the reduced chrome liquors obtained depends on the order in which the chemicals are added.

The procedures preferred in practice are as follows:
Weaker masking = dichromate/sulfuric acid + reducing agent

Stronger masking = dichromate/reducing agent + sulfuric acid

Special BASF tanning auxiliaries

Neutrigan MON	Self regulating basifying agent. This product prevents large variations in pH, ensures very even chrome distribution, and gives a tight, smooth, fine grain.
Mollescal AGN	High molecular weight, water-soluble copolymer. Used as a lubricant in wet processes of leather production to reduce friction and thus also the tendency to tangling and knotting as well as the risk of pieces of material being torn off and abrasion marks being formed especially when processing in short floats.
Tamol GA	Neutralizing agent for all types of chrome-tanned leather. Improves the softness and fullness of the leather and the elasticity of the grain. Enhances the nap on suede. Gives more level shades when dyed, speeds up vegetable retannages.
Tamol NNOL	Tanning auxiliary with a neutralizing, retanning and levelling action. Especially appropriate for white leathers and leathers dyed to pale shades that are required to have high lightfastness.

Flow chart of chrome leather tanning

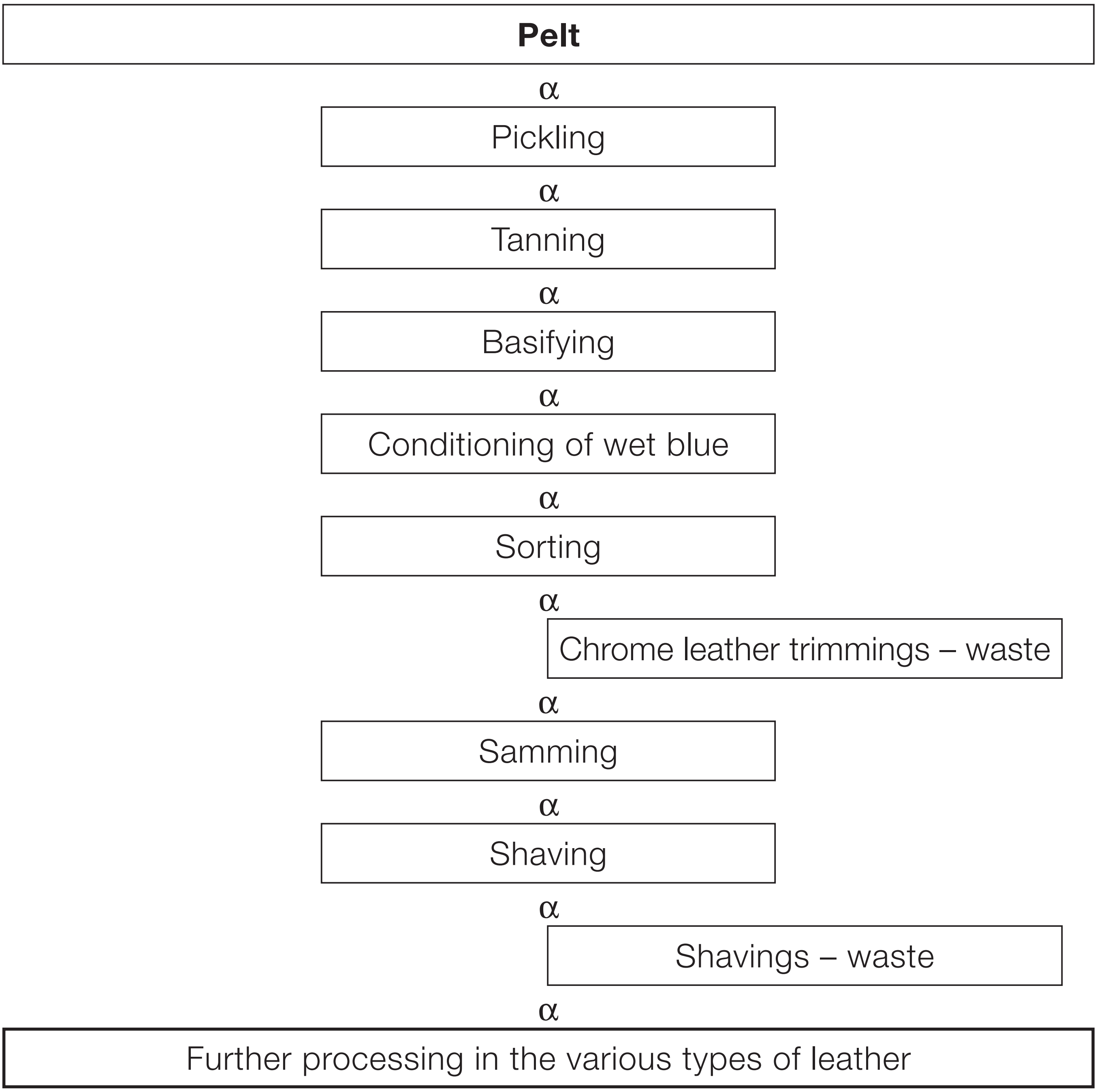

Other tanning methods

Wet white tannage

Definition:	Contrary to wet blue

Variation A: Free of heavy metals and aluminium salts.
Variation B: Free of chromium, but Al, Zr, Ti, Fe are accepted.

Wet white made by pure organic tanning has gained more and more importance in the recent years. In this process the wet white is produced by combinations of:

Aldehydes
Syntans and vegetable tanning agents
Polymers
Auxiliaries

The properties of the leather are adjusted mainly by the amount and type of syntan used and by the process parameters.
A wide variety of different types of leather are thus available, e. g.:

Automotive leathers
Upholstery leather
Garment leather
Shoe upper leather

Shavings and cuttings of wet white leather are free of chrome.

Selected BASF products for wet white leather

Basyntan DLX-N	Lightfast syntan with a strong tanning action and high fastness. Especially appropriate for tanning wet white and reptile skins, and for retanning white leathers and other types of leather with high lightfastness and heat resistance.

Basyntan SW Liquid	Basyntan SW Liquid is a very effective pretanning and tanning agent for wet white, especially for automotive leather. It also performs just as effectively as a wet blue retanning agent for all types of automotive and upholstery leather, and for garment, shoe and white leathers. The retanned leather has a fine, tight grain and can be dyed to brilliant, level shades.
Relugan GT 50/ Relugan GT 24	A 50 % and a 24 % solution of glutaraldehyde. Can be used for all types of leather as pre- or retanning agent or as the sole tanning agent. High dispersing capacity for natural fatty substances. Give soft, perspiration-resistant leathers.
Relugan GTW	Modified glutaraldehyde. Gives leathers with high lightfastness and a fine, flat grain. Makes leathers easier to dye, and enables them to be dyed to intense shades.
Relugan GTP	New aldehyde pre- and retanning agent with a more pleasant odour. Very effective for use on wet white. Can be used to retan chrome-tanned leathers in order to give soft leathers with a smooth grain, a good response to dyeing and excellent washfastness and perspiration resistance.
Relugan GX	Odourless aldehyde tanning agent used to support pretannage of wet white leather and to retan chrome-tanned leather as well as wet white leather. Gives soft leathers that can be dyed to very level, brilliant shades. Excellent resistance to yellowing, which enables it to be used for white leather and leather dyed to pastel shades. Can also be used to wet back crust without any ammonia having to be used.
Relugan RE	Improves the fullness and softness of retanned leather.

Relugan RF	Can be used in tannages and retannages for chrome-tanned and wet white tanned leathers to improve fullness and lightfastness of the leather and the tightness of the grain. Boosts the exhaustion of chrome.
Relugan RV	Relugan RV improves the fullness of chrome-tanned and wet white tanned leathers and the tightness of the grain, and reduces their elasticity. Very effective in combination with vegetable tanning agents. Speeds up vegetable tanning processes, improves the fullness of the leather and bleaches its colour.
Relugan SE	Excellent alternative to conventional syntans. Mainly used to retan leathers that are required to have high lightfastness, high heat resistance and a fine and tight grain.

Important parameters in wet white tanning:

- Thorough deliming and bating of the pelts
- Intensive washing
- Pickling through cross section
- Type and concentration of aldehyde
- pH
- Running time
- Basificaion
- Use of syntans

For further information on wet white tanning regard the following publication: G. Wolf, M. Breth, J. Carle and G. Igl, JALCA Vol. 96, p. 111, 2001.

Flow chart of wet white tanning

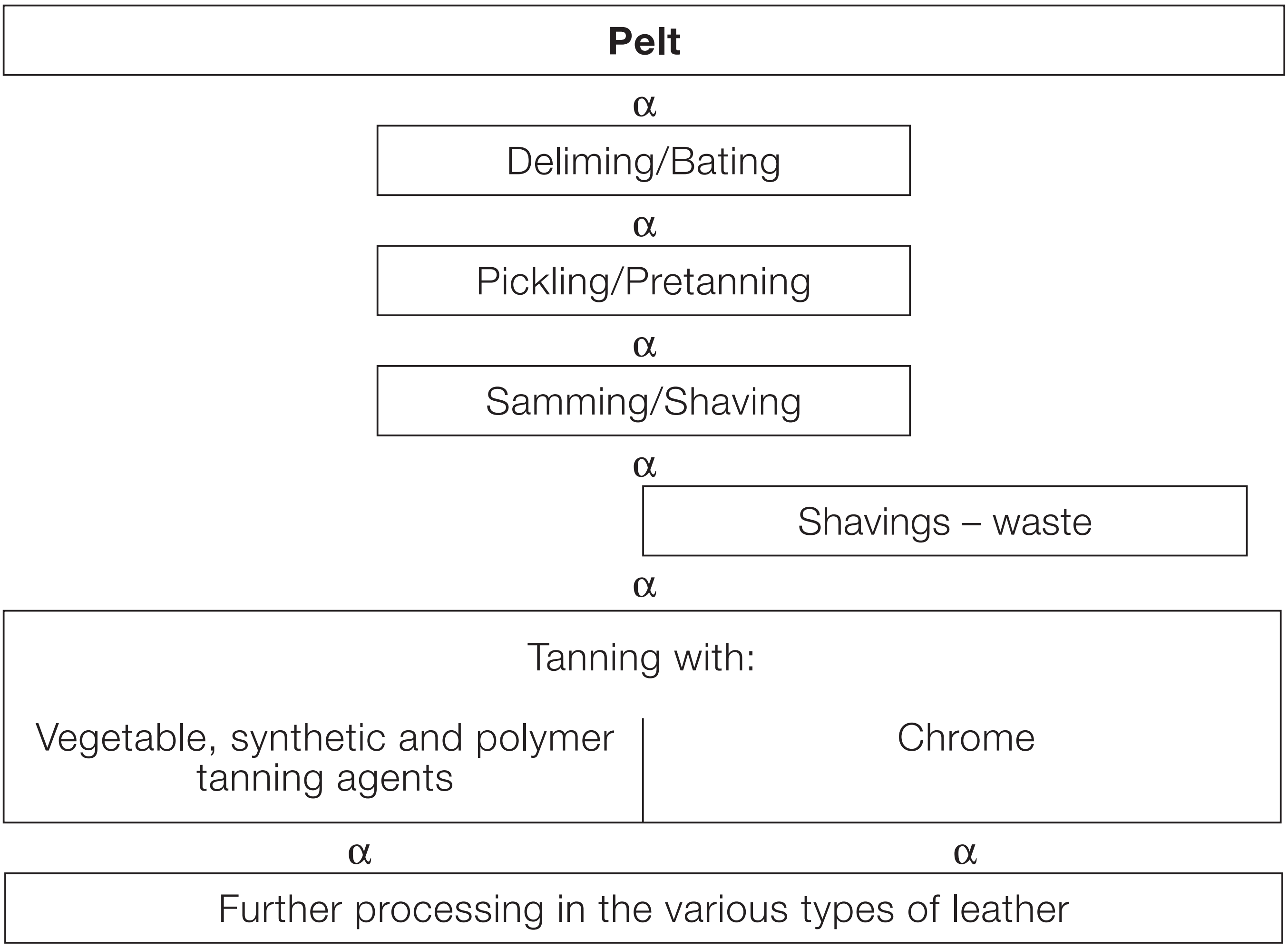

Oil tannage

This is a very special tanning method imploying unsaturated oils for an extremely soft leather called chamois leather.

BASF Oil tanning agent

Immergan A	Oil tanning agent for soft, white leathers such as glove leathers and garment leathers, which are expected to be tear-resistant and washable. Can be used in combination with fish oil and Relugan GT 50/GT 24 for tanning chamois leather; and with Lutan BN for glacé-kid type glove leathers.

Neutralization (deacidification) of leather

Purpose

Removal of free acids present in mineral tanned leather or formed in the leather during storage. For this purpose, mild auxiliaries are used which do not cause damage to the leather fibre.

This process should be more correctly called deacidification and not neutralization, because the treatment of the leather is seldom extended to the neutral point.

Procedure

Neutralization is carried out according to the type of leather to be produced. Intensive neutralization throughout the whole cross-section is necessary for the production of soft leathers and neutralization to only a certain depth for firmer leathers.

Instead of using alkalis, the leathers are in some cases treated only with lightly neutralizing syntan-like auxiliaries.

Overneutralizing should always be avoided, as otherwise a coarse loose grain and an empty handle are obtained.

Neutralizing agents (general)

Product	pH	Properties
Soda (sodium carbonate)	10.8 – 11.2	Risk of overneutralization, because of superficial action. No thorough uniform neutralization even after prolonged treatment.
Sodium bicarbonate (sodium hydrogen carbonate)	7.8 – 8.1	Good penetrative effect. Risk of overneutralization only when large amounts are used. Do not dissolve above 35 °C, because otherwise soda formation.
Borax	9.0 – 9.2	Risk of overneutralization similar to use of soda. Acts somewhat milder at the beginning but on prolonged treatment the alkali effect is higher than that of soda.
Ammonium bicarbonate	8.0 – 8.2	Particularly penetrative neutralizing effect. Risk of overneutralization cannot be completely excluded.
Sodium sulfite	7.8 – 8.0	Mild neutralizing agent with uniform penetrative power.
Sodium thiosulfate	6.5 – 7.0	Poor neutralizing effect, therefore used in large amounts. Bleaches leather by deposition of sulfur.
Sodium acetate	8.0 – 8.2	Mild neutralizing agent with bleaching effect.
Calcium formate	6.5 – 7.5	Mild neutralizing agent. Neutralizing effect is not very strong. Formation of calcium sulfate may cause trouble.
Sodium formate	7.5 – 9.5	Rapidly penetrating mild neutralizing agent. No overneutralization even if large amounts are used.

Theoretically corresponding parts by weight of various alkalis and neutralizing agents

1 part product α corresponds to ca. γ	Ammonia (25 %)	Ammonium bicarbonate	Borax (10 H_2O)	Sodium acetate	Sodium bicarbonate	Sodium formate	Sodium hydroxide (solid)	Sodium sulfite	Sodium thiosulfate	Neutrigan	Soda ash
Ammonia (25%)	–	1.16	2.8	1.21	1.24	1.0	0.59	1.85	3.65	2.2	0.78
Ammonium bicarbonate	0.86	–	2.41	1.04	1.06	0.86	0.51	1.59	3.14	1.87	0.67
Borax (10 H_2O)	0.36	0.41	–	0.43	0.44	0.36	0.21	0.66	1.3	0.78	0.28
Sodium acetate	0.83	0.96	2.33	–	1.02	0.83	0.49	1.54	3.03	1.8	0.65
Sodium bicarbonate	0.81	0.94	2.27	0.98	–	0.81	0.48	1.5	2.95	1.76	0.63
Sodium formate	1.0	1.16	2.8	1.21	1.24	–	0.59	1.85	3.65	2.2	0.78
Sodium hydoxide (solid)	1.7	1.98	4.77	2.05	2.1	1.7	–	3.15	6.2	3.7	1.33
Sodium sulfite	0.54	0.63	1.51	0.65	0.67	0.54	0.32	–	1.97	1.17	0.42
Sodium thiosulfate	0.27	0.32	0.77	0.34	0.34	0.27	0.16	0.51	–	0.6	0.21
Neutrigan	0.46	0.53	1.28	0.57	0.57	0.46	0.27	0.85	1.68	–	0.36
Soda ash	1.28	1.49	3.6	1.58	1.58	1.28	0.75	2.38	4.68	2.79	–

BASF neutralizing agents

Neutrigan	Complex-forming neutralizing agent and mild basifying agent which gives full leathers with a tight grain that respond well to dyeing. Can prevent formation of Cr(VI).
Basyntan FC	Auxiliary tanning agent with a bleaching action and an excellent dispersing effect. Can be used to neutralize and retan chrome-tanned leathers with a sensitive grain and in vegetable tanning.
Tamol GA	Neutralizing agent for all types of chrome-tanned leather. Improves the softness and fullness of the leather and the elasticity of the grain. Enhances the nap on suede. Gives more level shades when dyed, speeds up vegetable retannages.
Tamol M/Tamol MB	Dispersing agents used to speed up the uptake and improve the distribution of vegetable tanning agents. These products promote the penetration of dyes through chrome-tanned leather and give more level shades.
Tamol NA	The excellent buffering capacity of Tamol NA promotes the neutralization of chrome-tanned leather. It can be employed in retannages to disperse retanning agents and dyes, and the leather can be dyed to brilliant, level shades. Reduces the formation of chromium(VI).
Tamol NNI	Dispersing and levelling agent. Promotes the penetration of dyes through chrome-tanned leather and wet white leather and gives more level shades.
Tamol NNOL	Tanning auxiliary with a neutralizing, retanning and levelling action. Especially appropriate for white leathers and leathers dyed to pale shades that are required to have high lightfastness.

Retanning

The following product groups were developed for retanning chrome tanned leather and are still mainly used for this purpose. Yet some of them have a strong affinity to the collagen and are therefore increasingly used in metal free combination tannages.

Structurs of aromatic and aliphatic retanning agents

Aromatic tanning agents

α α

Phenolic tanning agents	Non-phenolic tanning agents
Replacement tanning agents White-tanning agents Pretanning and retanning agents	Auxiliary and bleach-tanning agents

Aliphatic tanning materials

α α α

Aldehyde tanning agents	Polycondensation and polymerisation compounds	Paraffin derivatives and fats
Formaldehyde	Methylol urea	Paraffin sulfochloride
Glutaraldehyde	Methylol melamine	Fatty alcohol
Dialdehyde starch	Methylol dicyandiamide	Fish oil
	Diisocyanate	
	Acrylates	

Some basic constituents of synthetic tanning agents

Phenol

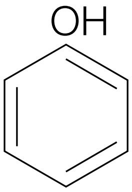

Dihydroxydiphenyl sulfone

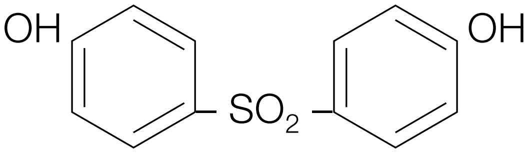

Naphthalene

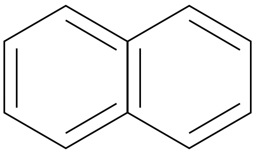

ß-Naphthol

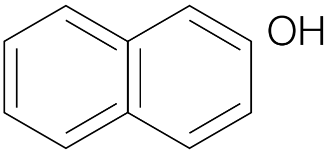

Aromatic ether

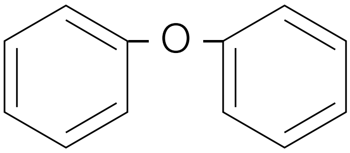

These basic constituents are attached to one another with the aid of formaldehyde through methylene bridges. They are adjusted to the optimum degree of condensation (binuclear and trinuclear), made water-soluble by sulfonation or sulfomethylation and adapted by means of buffering systems to meet application requirements.

BASF synthetic tanning and retanning agents

1. Pretanning agents

Basyntan RS-3	Pretanning agent applied prior to vegetable tanning. Accelerates the penetration of vegetable tanning agents and gives pale leathers with a fine grain. Conc.: B 96 %
Basyntan TM Liquid	Pretanning agent for lightening the colour of vegetable-tanned leather. Can also be used for deacidification and as a retanning agent for lightening the colour of chrome-tanned leather. Conc.: ca. 45 %

2. Synthetic tanning agents and retanning agents

Basyntan AN/ Basyntan AN Liquid	For retanning leathers that are intended to be dyed to full, intense shades. Can be combined with chrome and aluminium tanning agents.	
	Basyntan AN:	Conc.: B 95 %, pH ca. 3.7
	Basyntan AN Liqu.:	Conc.: ca. 41 %, pH ca. 4
Basyntan ANF Liquid	Gives level dyeings with high coverage, with little bleaching of the shade. Retanning agent with a medium filling action. Conc.: ca. 37 %, pH ca. 5.2	
Basyntan D	For retanning chrome-tanned leather. Gives high fullness. Conc.: B 96 %, pH ca. 4.2	
Basyntan DLE/ Basyntan DLE-T Liquid	All-round tanning agents for full, soft leathers.	
	Basyntan DLE:	Conc.: B 96 %, pH ca. 3.3
	Basyntan DLE-T Liqu.	Conc.: ca. 40 %, pH ca. 3.9

Basyntan DLX-N	Lightfast syntan with a strong tanning action and high fastness. Especially appropriate for tanning wet white and reptile skins, and for retanning white leathers and other types of leather with high lightfastness and heat resistance. Conc.: B 96 %, pH ca. 4.2
Basyntan FC	Auxiliary tanning agent with a bleaching action and an excellent dispersing effect. Can be used to neutralize and retan chrome-tanned leathers with a sensitive grain and in vegetable tanning. Conc.: B 95 %, pH ca. 1.4
Basyntan I/ Basyntan IZ	Tanning agents that can be used to accelerate vegetable tannages and to enhance the colour of the leather. They can increase the yield. They can be used in retannages applied to chrome-tanned leather in order to obtain leather with a tight grain, a full handle and a good response to dyeing. Basyntan I: Conc.: B 96 %, pH ca. 3.8 Basyntan IZ:. Conc.: B 92 %, pH ca. 4
Basyntan MLB/ Basyntan MLB Liquid	Especially recommended for all types of milled leather such as upholstery, automotive and garment leathers and nappa shoe uppers. The leather has a fine, even grain after milling. It can be dyed to very level, intense shades and possesses good fastness. Basyntan MLB: Conc.: B 95 %, pH ca. 4 Basyntan MLB Liqu.: Conc.: ca. 40 %, pH ca. 4
Basyntan N	Very appropriate for all types of soft, full leather. Conc.: B 95 %, pH ca. 4
Basyntan SL	Retanning agent with high fastness for use on soft leathers with a full handle and a tight grain. Especially appropriate for shoe uppers. Conc.: B 95 %, pH ca. 3.8

Basyntan SW Liquid	Basyntan SW Liquid is a very effective pretanning and tanning agent for wet white, especially for automotive leather. It also performs just as effectively as a wet blue retanning agent for all types of automotive and upholstery leather, and for garment, shoe and white leathers. The retanned leather has a fine, tight grain and can be dyed to brilliant, level shades. Conc.: ca. 42 %, pH ca. 4.5
Basyntan WL/ Basyntan WL Liquid	For retanning all types of leather with high fastness. The leather has a fine grain and responds well to buffing. Basyntan WL: Conc.: B 95 %, pH ca. 3.7 Basyntan WL Liqu.: Conc.: ca. 40 %, pH ca. 3.8
Basyntan X	Universal retanning agent. Gives full, well rounded leathers with a fine grain pattern. Has a pronounced dispersing effect on vegetable tanning agents. Conc.: B 95 %, pH ca. 4.9

3. Polymeric retanning agents

Densotan A	Novel type of polymer with an extraordinary dispersing action, which makes it easier to control and opimize the processes in wet finishing. Very effective for producing all types of water-resistant leather. Excellent fastness, odour-free, and low fogging, which makes it a very appropriate choice for automotive leathers.
Relugan AME	Amphoteric polymer. Improves the depth of shade and levelness of leathers dyed with anionic dyes. Can hide small defects in the grain and improves the tightness of the grain.
Relugan RE	Improves the fullness and softness of retanned leathers without affecting the typical chrome-tanned character of the leather.

Relugan RF	Can be used in chrome tannages and retannages for chrome-tanned leathers to improve fullness and lightfastness of the leather and the tightness of the grain. Boosts the exhaustion of chrome.
Relugan RV	Relugan RV improves the fullness of chrome-tanned leathers and the tightness of the grain, and reduces their elasticity. Very effective in combination with vegetable tanning agents. Speeds up vegetable tanning processes, improves the fullness of the leather and bleaches its colour.
Relugan SE	Excellent alternative to conventional syntans. Mainly used to retan leathers that are required to have high lightfastness, high heat resistance and a fine grain.

4. Resin tanning agents

Relugan D	Lightfast resin tanning agent for full-grain leather and corrected-grain chrome-tanned leather. Improves fullness, buffability and the tightness of the grain.
Relugan DLF/ Relugan DLF Liquid	Relugan DLF and DLF Liquid have an especially low formaldehyde content and are very effective for enhancing the fullness of the leather in the loosely structured areas of the skin. The leather can be dyed to very level shades, and the lightening effect on the intrinsic colour of the leather is minimal. Leathers retanned with Relugan DLF respond well to buffing, and nubuck and suede can be dyed to more brilliant shades.
Relugan S	Resin tanning agent with a dispersing and levelling action. Leathers respond well to buffing and can be dyed to brilliant shades.

5. BASF Aldehyde-tanning agents

Relugan GT 50/ Relugan GT 24	A 50 % and a 24 % solution of glutaraldehyde. Can be used for all types of leather as a retanning agent or as the sole tanning agent. High dispersing capacity for fat. Give soft, perspiration-resistant leathers.
Relugan GTW	Modified glutaraldehyde. Gives leathers with high lightfastness and a fine, flat grain. Makes leathers easier to dye, and enables them to be dyed to intense shades.
Relugan GTP	New aldehyde tanning agent with a more pleasant odour. Very effective for use on wet white. Can be used to retan chrome-tanned leathers in order to give soft leathers with a smooth grain, a good response to dyeing and excellent washfastness and perspiration resistance.
Relugan GX	Odourless aldehyde tanning agent used to retan chrome-tanned leather. Gives soft leathers that can be dyed to very level, brilliant shades. Excellent resistance to yellowing, which enables it to be used for white leather and leather dyed to pastel shades. Can also be used to wet back crust without any ammonia having to be used.

6. BASF Oil tanning agent

Immergan A	Oil tanning agent for soft, white, leathers such as glove leathers and garment leathers, which are expected to be tear-resistant and washable. Can be used in combination with fish oil and Relugan GT 50/ GT 24 for tanning chamois leather; and with Lutan BN for glacé-kid type glove leathers.

7. Tanning and retanning auxiliaries

Tamol GA	Neutralizing agent for all types of chrome-tanned leather. Improves the softness and fullness of the leather and the elasticity of the grain. Enhances the nap on suede. Gives more level shades when dyed, speeds up vegetable retannages.
Tamol M/Tamol MB	Dispersing agents used to speed up the uptake and improve the distribution of vegetable tanning agents. These products promote the penetration of dyes through chrome-tanned leather and give more level shades.
Tamol NA	The excellent buffering capacity of Tamol NA promotes the neutralization of chrome-tanned leather. It can be employed in retannages to disperse retanning agents and dyes, and the leather can be dyed to brilliant, level shades. Reduces the formation of chromium(VI) and acts as a scavenger for free formaldehyde.
Tamol NNI	Dispersing and levelling agent. Promotes the penetration of dyes through chrome-tanned leather and wet white leather and gives more level shades.
Tamol NNOL	Tanning auxiliary with a neutralizing, retanning and levelling action. Especially appropriate for white leathers and leathers dyed to pale shades that are required to have high lightfastness.
Bastamol K	Fixing agent used to fix all types of anionic tanning agents. Reduces the water absorption of vegetable-tanned leather and the loss by washing. Enhances the colour of the leather and its perspiration resistance. Chrome-tanned leathers are fuller and have a tighter grain.

Bleaching and fixation

Bleaching methods

1. **Pelts and leathers tanned with formaldehyde, aluminium and fish oil**
   a. Oxidation bleach:
      1. Potassium permanganate/sodium bisulfite
      2. Hydrogen peroxide
      3. Sodium chlorite
   b. Reduction bleach

2. **Vegetable/synthetic tanned leather**
   a. Bleaching with Basyntan D, DLE, DLX-N or WL.
   b. Bleaching with Tamol NNOL.
   c. Bleaching with acid auxiliary tanning agents (Basyntan FC).

3. **Chrome leather**
   a. Treatment with pale-tanning Basyntan or Tamol types.
   b. Sodium thiosulfate/acid treatment (deposition of colloidal sulfur).
   c. Bleaching the leather by deposition of insoluble white salts. Pre-treatment with barium chloride or lead acetate and after-treatment with sulfuric acid or magnesium sulfate or by deposition of titanium dioxide.

BASF bleach-tanning agents and bleaching auxiliaries

Basyntan FC	cf. chapter “BASF synthetic and tanning and retanning agents”
Basyntan D, DLE, DLX-N	
Basyntan WL	

Tamol NNOL	Anionic, light fast levelling agent with bleach effect.

Fixing agents for vegetable tannins and syntans

The object of fixing is to convert the unbound tannins and syntans in the leather into such a form that they cannot be removed by washing.

Bastamol K	Fixing agent used to fix all types of anionic tanning agents. Reduces the water absorption of vegetable-tanned leather and the loss by washing. Enhances the colour of the leather and its perspiration resistance. Chrome-tanned leathers are fuller and have a tighter grain.

Loading agents

Product	Chem. formula	Properties
Magnesium sulfate (Epsom salt)	$MgSO_4 \cdot 7H_2O$	Precipitates tan solutions, increases weight, strongly increases ash.
Barium sulfate (heavy spar)	$BaSO_4$	Produced on leather by conversion of barium chloride with sulfates or sulfuric acid.
Lead sulfate	$PbSO_4$	Produced on leather by conversion of lead acetate with sulfates or sulfuric acid.

Vegetable tanning materials and molasses are also used.

Tanner’s tools

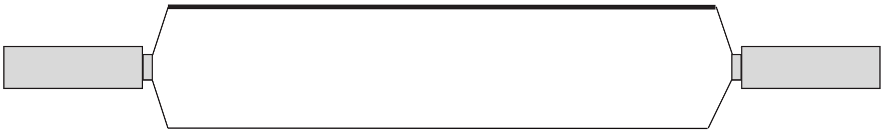
fleshing knife

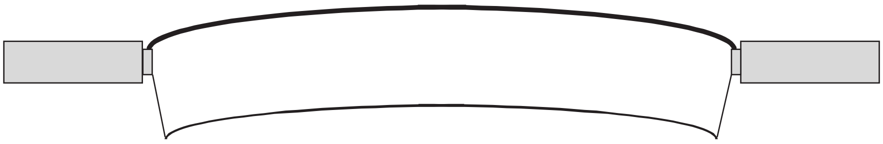
unhairing knife

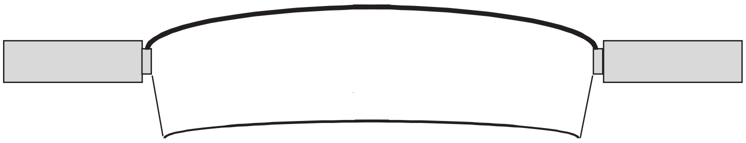
scudding knife

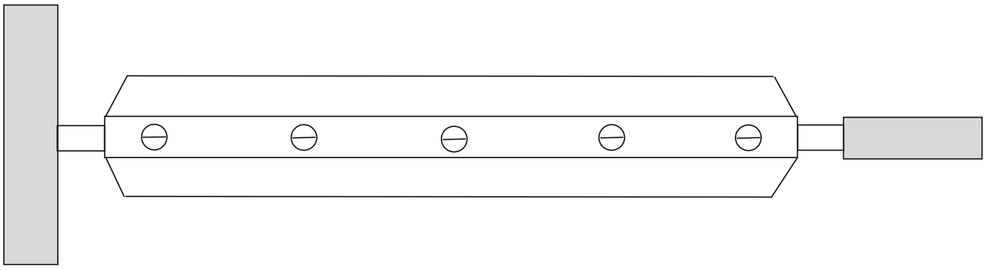
shaving knife

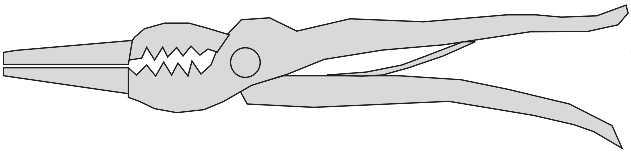
tanner’s tongs

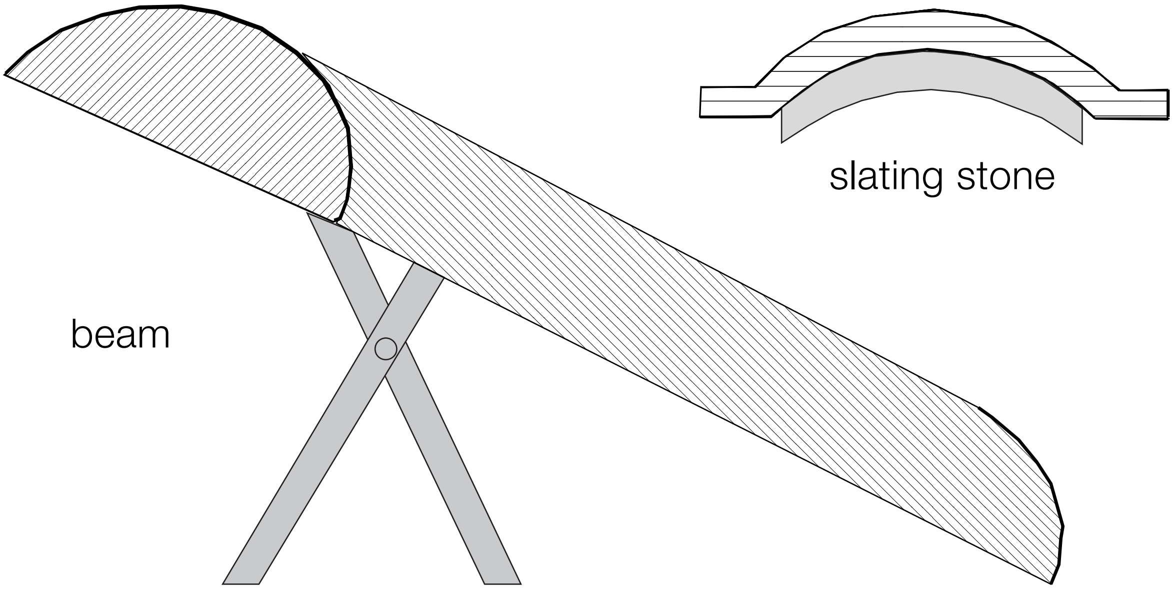
beam

slating stone

Fleshing machine – operating principle

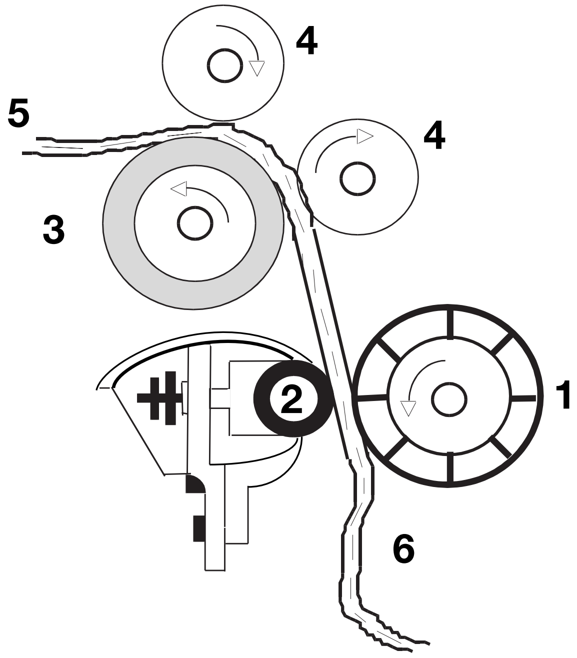

1 = knife cylinder

2 = pneumatic pressure roll

3 = backing roll

4 = transport rolls

5 = inlet – pelt to be fleshed

6 = outlet – fleshed pelt

Splitting machine – operating principle

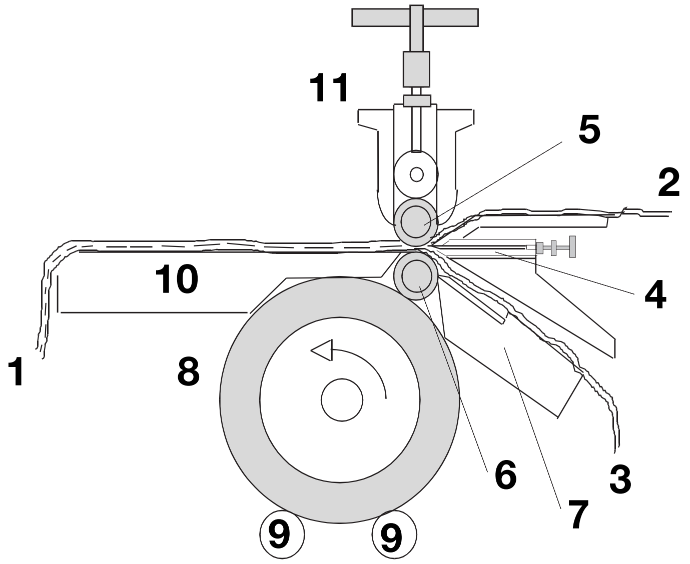

1 = unsplit hide
2 = grain or top split
3 = flesh or bottom split
4 = bandknife with guide
5 = transport roll
6 = section roll
7 = doctor roll
8 = rubber roll
9 = backing roll
10 = table
11 = thickness adjustment top

Samming machine – operating principle

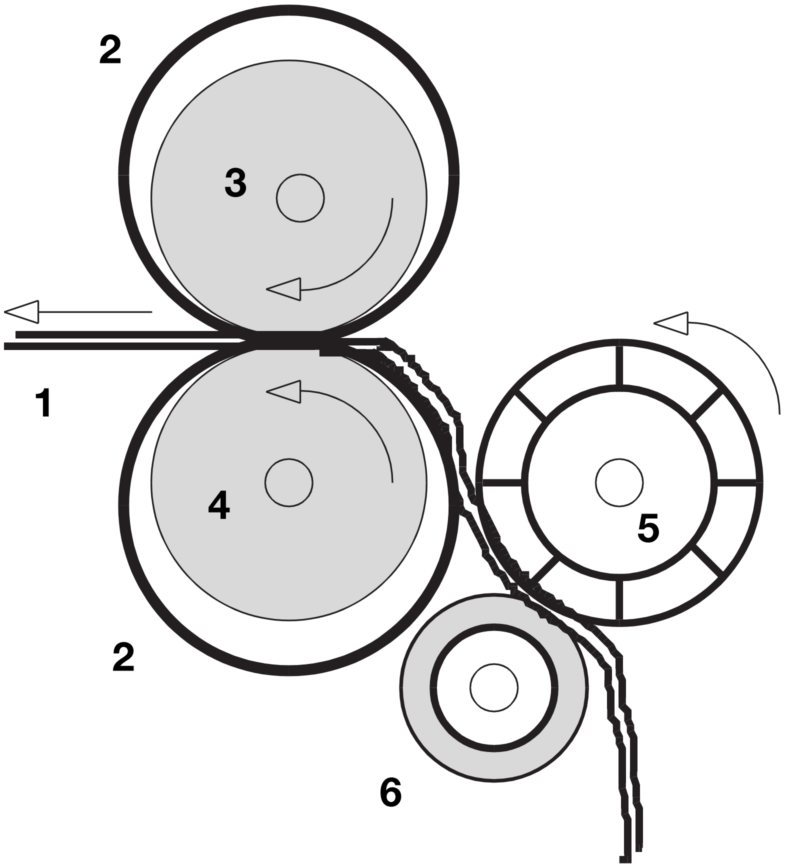

1 = sammed leather

2 = felt sleeve for taking up water

3 = pressure roll with spring bearing

4 = swivelling pressure roll

5 = flattening knife cylinder

6 = swivelling rubber roll

Shaving machine – operating principle

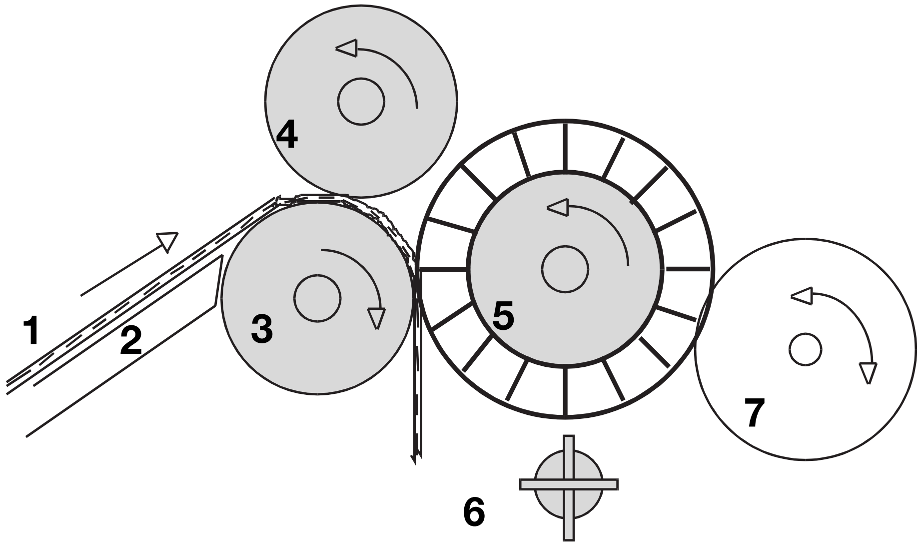

1 = leather to be shaved

2 = table

3 = pressure roll

4 = transport roll

5 = knife roll

6 = repeller blades

7 = grinding disk

Glossary of terms relating to tanning and tanning agents

Astringency
A term for the affinity of a tanning agent or a tan liquor for the skin substance. The astringency is dependent on various factors in tanning.

Acid value (titration acidity)
The titratable acidity is a measure of the free acids in a product. The acid value is expressed in the number of mg 0.1 N NaOH required to neutralize the free acids in 1 g of the product sample.

$$\text{Calculation: } \frac{\text{ml } 0.1 \text{ N NaOH} \cdot 5.6 \cdot 100}{\text{sample weight} \cdot \text{dry weight}} = \text{mg KOH} = \text{acid value}$$

Affinity
An attractive force between substances that causes them to enter into and remain in chemical combination.

Analytical strength (determination of tannin – filter method)
Preparation of an analytical solution for quantitative determination of tannin according to the hide powder method. The solution must contain 4.0 ± 0.25 pure tannin per litre in order to obtain comparable values.

Ash
Total residue on ignition.

Binding capacity
Maximum amount of tanning agent bound by the hide substance. The binding capacity gives an indication of the weight-imparting effect of tanning materials.

Binding rate
The amount of tanning material bound within a certain period of time. The binding rate decreases in the course of the tanning process.

Binding strength
The binding strength is determined by intensive washing of the leather.

Case-hardening
Occurs in tanning pelts that have not been properly prepared, when tanning solutions of excessively high concentration are used at the beginning of the tanning process. The uptake of tanning agents is stopped and the inner zones of the pelts remain untanned even if the pelts are left in the tanning liquor for a prolonged period.

Concentration
Sum of pure tans plus non-tans plus insolubles.

Degree of tannage
The number of parts of tanning material bound by 100 parts of hide substance.

Flocculation point
The point at which a permanent flocculation occurs in basifying chrome solutions; the closer a chrome liquor lies at the flocculation point, the higher is its basicity and also its astringency.

Flocculation value
The amount (ml) of n/10 caustic soda required for 50 mg chrome to attain flocculation.

Hide powder
Hide freed from epidermis, hair and subcutaneous tissue (true skin) and uniformly disintegrated according to a standard method. A distinction is made between untreated and prechromed hide powder. Used for quantitative analysis of tanning agents.

Insolubles
Difference of total solids and total insolubles in solutions and extracts.

Non-tans
Solids retained in exhausted analytic tannin solutions or extracts after tannage.

Olation
Olation is the linking up of chromium complexes with one another with separation of water. The degree of olation is the proportion of olated hydroxyl groups to the theoretically possible total amount of hydroxyl groups per chromium atom. The higher the degree of olation, the higher the stability of chrome solutions to acid.

Percentage of tans in total solubles
This value is determined as follows.

$$\frac{\text{tans} \cdot 100}{\text{tans} \cdot \text{non-tans}} = \text{percentage of tans in total solubles}$$

Pure tannin
Tans in total solubles minus non-tans.

Salting out
The treatment of tan solutions with increasing amounts of common salt. Thus, the astringency, particle size and susceptibility to electrolytes of tan solutions are determined.

Self-basification
Basification is the introduction of hydroxy groups into the mineral tanning agent complex = partial neutralization of the chrome tanning agents. Chrome tanning agents are regarded as self-basifying when they are used in conjunction with appropriate proportions of basifying agents which dissolve at a slow rate.

Solids (total solids)
The dry residue of an analytical tannin solution or extract.

Solubles (total solubles)
The dry residue of a filtered analytical tannin solution or extract.

Sulfited tanning materials
Tanning materials to which sodium sulfite or sodium bisulfite is added during the leaching or extracting process to increase the yield of tans. Auxiliary tanning agents with dispersing effect, such as Tamol M, can also be added to advantage.

Tanning and binding value
The tanning and binding value gives an indication of the quantitative and qualitative uptake of vegetable and synthetic tanning agents by the hide powder.
The tanning value is the total amount of tanning material taken up by the hide powder.
The binding value, on the other hand, indicates only the irreversibly bound portion of the tanning material.

Tans (pure tannin)
Total solubles minus non-tans.

Wet blue
Chrome tanned leather with bluish colour.

Wet white
Non-chrome tanned leather with a slightly yellowish color. Nowadays often used for leather tanned with a combination of aldehyde and vegetable/synthetic/polymeric tanning agents.

Emulsifiers and wetting agents

Chemical classification

Anionic products

1. Soaps and Turkey red oils
2. Sulfonated oils, fats and fatty acids
3. Alkyl sulfates
4. Alkyl sulfonates
5. Alkyl aryl sulfonates
6. Alkyl phosphates
7. Condensation products
   a. Condensation with aliphatic hydroxy and amino sulfonic acids
   b. Condensation with sulfocarboxylic acids
   c. Condensation with amino carboxylic acids
   d. Condensation with aromatic sulfonic and amino sulfonic acids

Cationic products

1. Condensation with amines
2. Condensation with urea derivatives
3. Condensation with tertiary nitrogen bases

Non-ionic products

1. Condensation with polyhydroxyl compounds
2. Hydroxyethylated products
   a. of fatty acids
   b. of fatty alcohols
   c. of fatty acid amides
   d. of fatty amines
   e. of alkyl phenols and alkyl naphthols
3. Condensation with polyimines

Emulsion types

1. **Oil-in-water emulsion**
   The outer phase is water.
   Abbreviation: o/w emulsion

2. **Water-in-oil emulsion**
   The outer phase is oil.
   Abbreviation: w/o emulsion

3. **Secondary emulsion**
   Abbreviation: (w/o)w emulsion
4. **Tertiary emulsion**
   Abbreviation: (w/o-w)o emulsion

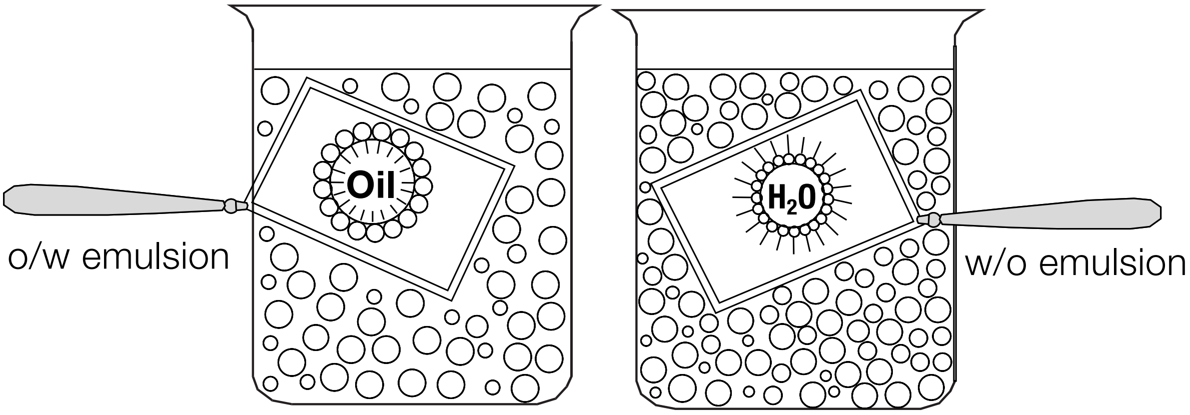

Determination of emulsion type

a. Indicator test method
b. Drop diluting test method
c. Conductivity test method
d. Rubbing test method
e. Filter paper test method
f. Cobalt chloride test method

The main BASF emulsifiers and wetting agents for the leather and fur industries

Eusapon S (nonionic)	Soaking, liming, painting, bating, degreasing, wetting back, scouring of fur skins; high emulsifying power for natural fats, strong wetting effect.
Eusapon W	Soaking, wetting back.
Lipamin OK (cationic)	Wetting back, dyeing, fatliquoring.
Lipoderm N (anionic)	Wetting back, dyeing, fatliquoring.

Fatliquoring

Purpose

The fibre elements dehydrated by tanning are coated with a fat layer to give leather the desirable softness and handle by a sort of lubrication. At the same time, fatliquoring influences the physical properties of the leather, such as extensibility, tensile strength, wetting properties, waterproofness and permeability to air and water vapour.

The principal basic fatliquoring substances

A. Biological fatty substances

1. Vegetable oils
   a. Drying oils: linseed oil, hemp oil, poppy oil, nut oil, wood or tung oil. (Limited use)
   b. Semi-drying oils: colza or rape oil, maize oil, sunflower oil, soya bean oil, cotton seed oil, rice oil.
   c. Non-drying oils: olive oil, castor oil, ground nut oil (arachis oil), fruit kernel oils.
2. Vegetable fats
   Coconut fat, palm kernel fat, palm oil fat, Japan tallow.
3. Animal oils
   a. Marine animal oils: seal oil, whale oil, dolphin oil (no technical use)
   Fish oils: herring oil, sardine oil, menhaden oil
   Liver oils: cod liver oil, shark liver oil
   b. Land animal oils: neatsfoot oil, lard oil
4. Animal fats
   Beef and mutton tallow, lard, butter fat, bone fat, horse grease.
5. Waxes
   a. Vegetable: carnauba wax, candelilla wax, montan wax.
   b. Animal: beeswax, wool grease.

B. Non-biological fatty substances

Paraffin waxes, mineral oils, olefins, processed hydrocarbons, synthetic fatty acid esters and waxes, fatty alcohols, alkyl benzenes.

Characteristic values of the main fatty substances

Product	Density	Saponification value
Cod liver oil	0.921 – 0.928	179 – 193
Shark oil	0.865 – 0.929	85 – 188
Herring oil	0.917 – 0.931	179 – 194
Menhaden oil	0.925 – 0.935	189 – 198
Sardine oil	0.928 – 0.935	186 – 193
Ground nut oil	0.916 – 0.921	188 – 197
Olive oil	0.914 – 0.929	191 – 195
Castor oil	0.950 – 0.974	176 – 191
Cotton seed oil	0.913 – 0.927	191 – 199
Maize oil	0.920 – 0.928	188 – 198
Rape oil	0.911 – 0.918	172 – 176
Sesame oil	0.921 – 0.925	187 – 195
Soybean oil	0.922 – 0.934	188 – 195
Wood oil (Chinese)	0.936 – 0.945	188 – 197
Linseed oil	0.930 – 0.936	187 – 195

Unsaponifiable matter	Iodine value	Acid value	Solidification range
0.7 – 3.0 %	140 – 181	0.5 – 1.7	– 10 to 0 °C
2.0 – 56.0 %	100 – 200	0.1 – 3.0	– 20 to +10 °C
0.7 – 2.4 %	108 – 155	1 – 19	
0.6 – 1.6 %	139 – 193		ca. +17 °C
0.5 – 1.8 %	154 – 196	1 – 19	
0.3 – 1.0 %	83 – 103	ca. 1	– 3 to 0 °C
0.5 – 1.4 %	80 – 85		– 6 to 0 °C
0.3 – 0.4 %	81 – 86		– 18 to – 10 °C
1.0 – 2.0 %	101 – 121		– 6 to – 1 °C
1.3 – 1.6 %	117 – 123		– 15 to – 10 °C
0.5 – 1.6 %	94 – 105	0.5 – 6.0	– 10 to 0 °C
0.5 – 1.0 %	103 – 112		– 6 to – 3 °C
0.5 – 1.5 %	124 – 133		– 18 to – 8 °C
0.4 – 1.0 %	150 – 160		– 18 to + 2 °C
0.5 – 2.0 %	172 – 196		–27 to – 16 °C

Characteristic values of the main fatty substances

Product	Density	Saponification value
Coconut oil	0.920 – 0.938	246 – 268
Palm oil	0.921 – 0.948	196 – 210
Neatsfoot oil	0.913 – 0.919	192 – 196
Sperm oil	0.875 – 0.890	125 – 149
Beef tallow	0.936 – 0.953	190 – 200
Horse grease	0.915 – 0.933	195 – 200
Egg yolk (egg oil)	0.914 – 0.917	184 – 198
Wool grease (wax)	0.940 – 0.970	77 – 130
Beeswax	0.950 – 0.966	99 – 100
Carnauba wax	0.990 – 0.999	78 – 93
Japan wax	0.963 – 1.006	207 – 238
Montan wax	1.000 – 1.030	60 – 90
Mineral oil	0.860 – 0.900	–
Paraffin oil	0.885 – 0.900	–
Paraffin wax – soft	0.866 – 0.911	–
Paraffin wax – hard	0.866 – 0.911	–
Ceresin	0.910 – 0.970	–

Unsaponifiable matter	Iodine value	Acid value	Solidification range
0.2 – 0.3 %	8 – 10	–	+14 to +25 °C
0.2 – 0.3 %	51 – 57	–	+31 to +41 °C
0.1 – 0.6 %	68 – 81	1.0 – 6.0	– 12 to – 6 °C
35 – 44 %	71 – 93	0.1 – 0.4	+ 7 to +10 °C
0.1 – 0.3 %	32 – 47	0.5 – 5.0	+30 to +38 °C
0.4 – 0.7 %	74 – 94	–	+22 to +37 °C
0.2 – 4.2 %	64 – 82	–	+ 8 to +10 °C
39 – 50 %	15 – 29	1.0 – 3.0	+30 to +40 °C
52 – 55 %	6 – 15	17 – 24	+60 to +63 °C
52 – 56 %	8 – 14	4 – 8	+83 to +86 °C
0.4 – 1.6 %	4 – 15	–	+50 to +54 °C
25 – 60 %	8 – 15	28 – 32	+78 to +90 °C
–	–	–	–
–	–	–	–
–	0 – 6	–	+38 to +42 °C
–	0 – 6	–	+50 to +60 °C
–	–	–	+62 to +70 °C

Classification of leather fatliquoring products

1. Untreated oils, fats and waxes

2. Emulsified oils and fats

3. Sulfonated oils, fats and fatty alcohols
    a. sulfated products
    (-C-O-S bond, ester-like, splittable)
    b. sulfonated products
    (-C-S bond, true sulfo acid, unsplittable)

4. Chlorinated oils and fats
    a. chlorinated products
    b. sulfochlorinated products

5. Oxidation products of oils and fats

6. Hydrolysis products of oils and fats

Fatliquoring methods

1. Oiling-off (mainly for sole leather)

2. Cold stuffing on the table

3. Hot stuffing by the dipping process

4. Fatliquoring (principal method)
    a. fatliquoring in warm aqueous float
    b. fatliquoring in cold aqueous float
    c. dry fatliquoring (without float)
    d. oiling by brush

BASF fatliquor range

1. Fatliquors based on natural oils

Lipoderm Liquor 1C (AOX-free)	All-round fatliquor based on fish oil. Fat content approx. 90 %.
Lipoderm Liquor A1 (AOX-free)	Chrome-resistant fatliquor with very low odour. Resistant to yellowing by light and at high temperatures, very low fogging. Lipoderm Liquor A1 can be used to fatliquor all types of soft leather such as automotive, upholstery and garment leather, nappa shoe uppers and soft, milled leathers. Fat content approx. 70 %.
Lipoderm Liquor LA (AOX-free)	Leather treated with Lipoderm Liquor LA has a silky surface texture and a handle which is pleasantly soft, full and supple. It can be used to fatliquor all types of soft leather, especially upholstery leather and garment leather. Lipoderm Liquor LA's excellent fastness and very low fogging make it an ideal choice for fatliquoring automotive leather. Lipoderm Liquor LA can also be used to improve the handle of nubuck.
Lipoderm Liquor PN (AOX-free)	Fatliquor for soft, stretchy leathers with a tight grain, a slightly greasy handle and high fastness. Fat content approx. 60 %.
Lipoderm Liquor WF (AOX-free)	Reduces the water absorption and wettability of the leather, enhances the fatliquoring effect, and gives a tight grain and a greasy handle. Recommendable for use with the Densodrin system for water-resistant leathers. Fat content approx. 50 %.

2. Fatliquors based on synthetic oils

Lipoderm Liquor FP (AOX-free)	Polymeric fatliquor mainly used in combination with other fatliquors. High fullness, high exhaustion, odourless, low fogging, high yellowing resistance. For automotive leathers, shoe uppers and leathers that are washable and resistant to dry cleaning. Recommendable for use with the Densodrin system for water-resistant leathers.
Lipoderm Liquor PSE (AOX-free)	Lightfast, synthetic fatliquor for soft leathers. High penetration, high emulsifying power for synthetic oils, resistant to chrome. Fat content approx. 60 %.
Lipoderm Liquor SAF	Recommended for fatliquoring high-quality leathers such as aniline, softy, nappa and suede. Penetrates well and gives the leather a greasy handle and an elastic grain. Fat content approx. 80 %.
Lipoderm Liquor SLW (AOX-free)	Lightfast, synthetic fatliquor with very high penetration for soft, washable leathers. Can be used in combination with Densodrin types to enhance the softness of water-repellent leathers. Fat content approx. 60 %.
Lipoderm Liquor SOL (AOX-free)	Leather treated with Lipoderm Liquor SOL has a tight grain, a full handle and high fastness. It responds very well to dyeing. Lipoderm Liquor SOL can be employed as the main component of mixtures of fatliquors which can be applied to all types of leather, especially shoe upper leather. We would recommend combining Lipoderm Liquor SOL with selected fatliquors from our range in order to control the handle and specific properties of the leather.

3. Fatliquors based on natural and synthetic oils

Lipoderm Liquor CMG (AOX-free)	Gives very soft leather. Odourless, low-fogging and high fastness. Especially recommended for automotive leather, upholstery leather, garment leather and nappa shoe uppers. Fat content approx. 60 %.
Lipoderm Liquor SC	Mixture of natural and synthetic oils. Can be used as the sole fatliquor applied to shoe uppers. Fat content approx. 70 %.

4. Cationic fatliquors

Lipamin Liquor NO (AOX-free)	Lightfast, natural fatliquor, suitable for use in multicharge liquors, especially on leathers that are vacuum dried. Fat content approx. 60 %.
Lipamin Liquor SO (AOX-free)	Lightfast, synthetic fatliquor. Resistant to yellowing at high temperatures, suitable for use in multicharge liquors. Fat content approx. 60 %.

5. Water-insoluble fatliquors

Immergan A	Fatliquoring auxiliary. This product is lightfast. It inhibits exudation and increases the tensile strength of the leather.
Lipoderm Oil N1	Lipoderm Oil N1 is a natural raw oil with characteristics similar to those of neatsfoot oil. The leather gets a full, supple handle and a particular smooth, fine grain. Lipoderm Oil N1 can be recommended as a fatliquoring additive for all types of chrome leather, but especially for shoe uppers. If it is used as a “grain oil” on vegetable tanned leather, such as sole leather and case leather, higher elasticity and gloss are achieved.

6. Fatliquoring auxiliaries

Lipoderm N (AOX-free)	Anionic emulsifier and stabilizer for anionic fatliquors, with an additional fatliquoring action. Can be applied to washable leathers.
Lipamin OK (AOX-free)	Cationic stabilizer for cationic fatliquors, with an additional fatliquoring action.
Siligen HS (AOX-free)	Cationic emulsifier for fats and oils.

Analysis of leather fatliquoring agents

1. Water-insoluble fatliquoring agents

a. Determination of water content

b. Determination of non-volatile, non-fatty organic substances
(The insolubles in ether minus ash give the non-volatile, non-fatty substances)

c. Determination of total volatile substances
(Water and organic solvents)

d. Determination of content of mineral matter

e. Fatliquoring substances
(Product weighed out minus water, volatile and non-volatile organic substances and mineral matter)

f. Determination of fatty acids

g. Determination of unsaponifiable matter

2. Water-soluble fatliquoring agents

a. Determination of fatliquoring substances
(100 minus water, mineral matter and volatile organic substances = % fatliquoring substances)

b. Separation into emulsifying and emulsified components (according to Panzer-Niebuer)

Emulsified proportion = neutral fat, unsaponifiable matter, free fatty acids (in petroleum ether solution)
Emulsifying proportion = emulsifiers (in aqueous/alcoholic solution)

c. Testing for sulfonation

d. Determination of degree of sulfonation (total SO_3, inorganically and organically bound SO_3)

e. Determination of degree of neutralization

f. Determination of neutral salts in sulfonated oils

The testing of water-soluble fatliquoring agents is laid down in the German standard.

DIN 53345	Part 1	Sampling
	Part 2	Characterization of ionic charge
	Part 3	Determination of content of water and water-soluble solvents
	Part 4	Determination of content of water-vapour-volatile and water-immiscible solvents
	Part 5	Determination of content of fatty substances and mineral substances
	Part 6	Determination of pH in aqueous emulsion or solution
	Part 7	Determination of residual fat content of fatliquoring baths
	Part 8	Method for testing the stability to electrolytes
DIN 53346		Method for testing the stability to electrolytes of fatliquors for fur skins.

3. The principal characteristic chemical values of fats and oils

The iodine value (IV)	specifies the amount of unsaturated compounds.
The acid value (AV)	specifies the amount of free fatty acids contained in the fat.
The saponification value (SV)	specifies the amount of potassium hydroxide in mg necessary for neutralizing 1 g fatty acid.
The ester value (EV)	is a measure of the ester content of fats or waxes. It is identical to the saponification value of acid-free fats.
The peroxide value (PV)	is a measure of the peroxide-bound oxygen contained in fats or oils. It is used to assess the degree of oxidation.
The iodine colour value (ICV)	expresses the number of mg iodine in 100 ml standard iodine solution showing the same depth of shade as the sample.

General structure of fatliquors

Fatliquoring substances

α

Hydrophobic components
= emulsified components

α

consisting of:
unsaponifiable and
saponifiable substances

=

a. Biological fatty substances (animal and vegetable oils/fats)

b. Non-biological fatty substances (paraffins, olefins, processed hydrocarbons, synthetic fatty acid esters, fatty alcohols, alkyl benzenes, polyethers)

α

Hydrophilic components
= emulsifying components

α

consisting of:
emulsifiers and
fatliquoring auxiliaries

=

a. Anionic substances (sulfates, sulfonates, carboxylic acids)

b. Cationic substances (amine salts, suphonium and phosphonium compounds, polyamines, fatty amines)

c. Nonionic substances (substituted polyalcohols, polyglycol ethers)

+

Mineral matter

= inorganic salts

+

Volatile matter

= water, solvents

Courses of reactions in the production of fatliquors

1. sulfating

$$\text{Fatty substance} + H_2SO_4 \quad \gamma \quad R-O-SO_3H$$

2. sulfiting

$$\text{Fatty substance} + O_2 + NaHSO_3 \quad \gamma \quad R-SO_3Na$$

3. sulfochlorination

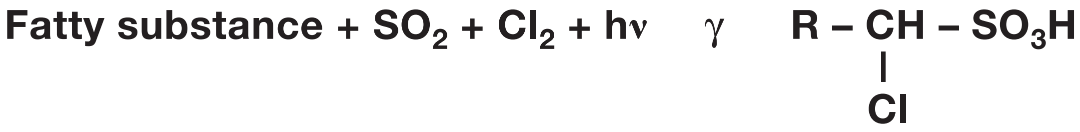

$$\text{Fatty substance} + SO_2 + Cl_2 + h\nu \quad \gamma \quad R-\underset{\displaystyle Cl}{\underset{|}{CH}}-SO_3H$$

4. Esterification and hydroxyethylation

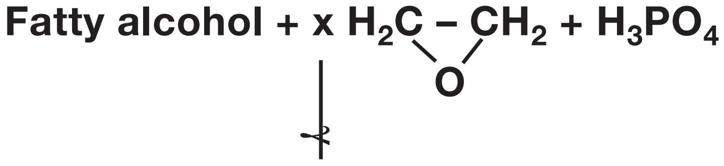

Fatty alcohol + x $H_2C - CH_2$ + H_3PO_4

$$R-O-(CH_2-CH_2-O)_x-PO_3H$$

Composition of natural oils and fats

Main constituents:

Mixtures of triglycerides of saturated and unsaturated fatty acids

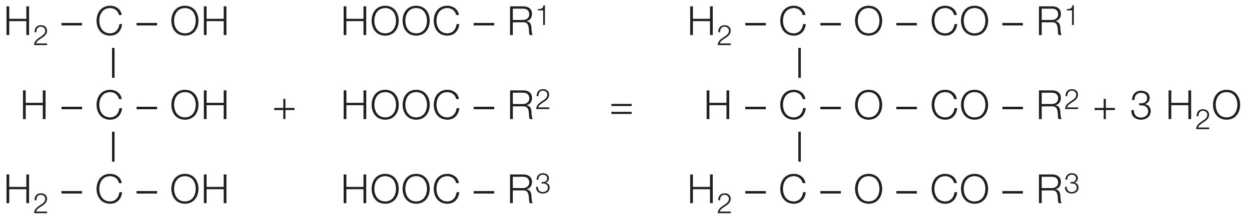

$$\begin{array}{lclcl} H_2-C-OH & & HOOC-R^1 & & H_2-C-O-CO-R^1 \\ \quad\;\;| & & & & \quad\;\;| \\ \;H-C-OH & + & HOOC-R^2 & = & \;H-C-O-CO-R^2 + 3\,H_2O \\ \quad\;\;| & & & & \quad\;\;| \\ H_2-C-OH & & HOOC-R^3 & & H_2-C-O-CO-R^3 \end{array}$$

Glycerine + fatty acid = triglyceride

Accompanying substances

Phosphatides, sterols (cholesterol, phytosterol), hydrocarbons (Squalene $C_{30}H_{50}$), vitamins, colorants, aromatics and flavours.

Percentages (average values) of fatty acids in some oils and fats

Trivial name – Fatty acid		Herring oil	Beef tallow	Neatsfoot oil	Soyabean oil	Coconut oil	Groundnut oil	Chemical designation
Caprylic a.	C 8:0					7		Octanoic a.
Capric a.	C 10:0					7		Decanoic a.
Lauric a.	C 12:0					48		Dodecanoic a.
Myristic a.	C 14:0	8	4			18	1	Tetradecanoic a.
Palmitic a.	C 16:0	14	29	15	10	9	12	Hexadecanoic a.
Stearic a.	C 18:0	2	23	3	2	3	4	Octadecanoic a.
Arachic a.	C 20:0						2	Eicosanoic a.
Behenic a.	C 22:0						4	Docosanoic a.
Palmitolic a.	C 16:1	6	5	10				Hexadecenoic a.
Oleic a.	C 18:1	8	35	60	25	7	54	Octadecenoic a.
Gadoleic a.	C 20:1						1	Eicosenoic a.
Eruic a.	C 22:1							Docosenoic
Linolic a.	C 18:2	3	3	2	10	2	30	Octadecadienoic a. (cis, cis)
Linolenic a.	C 18:2	1	2				1	Octadecadienoic a. (trans, trans)
Unsaturated fatty a.	C 20:2-6	25						–
Unsaturated fatty a.	C 22:3-6	19						–

Water-repellent treatment of leather

Purpose

Increasing the interfacial tension between leather fibres and water and thus reducing or almost completely eliminating the wettability with water by depositing water-repellents in the leather substance.

Hydrophobic = water-repellent
Oleophobic = oil- and dirt-repellent

The main water-repellents (general)

Chemical substances	Mode of action
Water-insoluble fats, resins, waxes, polymers, etc.	Deposition, clogging the interfibrillar spaces. Mainly statical action.
Chrome fatty acid complexes, perfluorinated chrome fatty acid complexes, chrome and aluminium alkylphosphates, etc.	Fixation of the water-repellent complex to the fibre. Increasing the surface tension against water.
Compounds with free carboxylic groups and complexing emulsifiers, e. g. fatty acids and esters, soaps, dicarboxylic acids, esters of phosphoric acid, polymeric fatty acids, imido acetic acid derivatives.	Formation of a water-repellent complex on the fibre. Increasing the surface tension against water.
Polysiloxanes, carbon fluoride resins, etc.	Surrounding the fibre with a water-repellent film. Increasing the surface tension against water.
Hydrophilic emulsifiers of the water-in-oil type, e. g., alkylated and alkylized derivatives of succinic acid, derivates of citric acid, esters of fatty acids of polyvalent alcohols, hydroxyethylated fatty acids or alcohols.	Clogging the interfibrillar spaces by water absorption and formation of emulsion and swelling.
Nitrogen-containing compounds, e. g., pyridinium chloride derivatives, alkylene derivatives, isocyanates.	Blocking the phenolic groups of tanning agents. Increasing the surface tension against water.

BASF water-repellents

All BASF water-repellents mentioned below are light fast and heat resistant. They do not contain organic solvents or organic halogen compounds, and so do not make any contribution to the AOX content of the waste water.

The water-repellent effect can be generally improved by fixation with metal salts.

Densodrin CD	Anionic water repellent for leathers that are expected to fulfil the highest standards of water resistance. Appropriate for leathers tested by the Maeser method. Contains silicone.
Densodrin EN	Anionic water repellent with high fastness for leathers with a medium degree of water resistance. Appropriate for leathers tested by the Bally Penetrometer method.
Densodrin ENS	Anionic water repellent with high fastness for leathers with a moderate to high degree of water resistance. Appropriate for leathers tested by the Bally Penetrometer method. Contains silicone.
Densodrin OF	Anionic, silicone-based water-repellent additive. Applied in aqueous float with Densodrin CD, Densodrin EN or Densodrin ENS. Enhances the water resistance and softness of the leather and gives a smooth, silky handle. Can also be applied as a handle modifier in finishing.

Densodrin PS	Silicone containing polymer emulsion. It forms the basis of a new water-repellent system which has been specially developed to make it easier to produce stiff, water-resistant leather. Used in combination with other water-repellents e. g. Densodrin CD, Densodrin EN or Densodrin ENS. Appropriate for leathers tested by the Maeser method.
Densodrin S	Anionic, silicone-based water-repellent additive. Applied in an aqueous float with Densodrin CD, Densodrin EN or Densodrin ENS as the main water repellent.
Densodrin SI	Additive which contains silicone. Used to enhance the water resistance of leather, especially in combination with other products from the Densodrin range. Densodrin SI can also be applied to crust or finished leather in order to obtain a silky handle and to improve softness.
Densotan A	Novel type of polymer with a neutralizing and retanning action. Very effective for producing water-resistant leather. Boosts the penetration of water-repellents, speeds up the process, prevents drawn grain and enhances the levelling and penetration of dyes. Stabilizer for water-repellents and fatliquors. Used in neutralization and/or in small amounts together with the water-repellent.

Drum Dyeing

Colour spectrum (value given in nm)

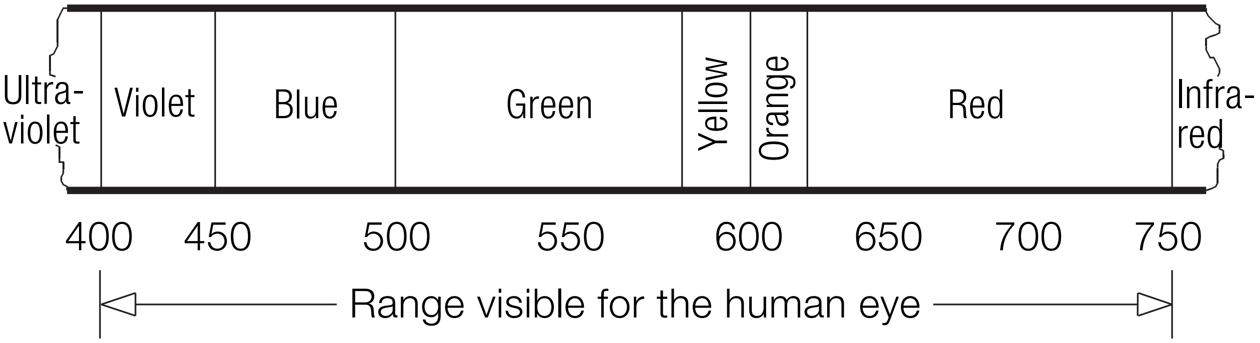

Absorption and reflection

Range of wave lengths* in nm	Absorbed spectral colour	Reflected complementary colour
400 – 435	Violet	Yellow-green
435 – 480	Blue	Yellow
480 – 490	Green-blue	Orange
490 – 500	Blue-green	Red
500 – 560	Green	Purple
560 – 580	Yellow-green	Violet
580 – 595	Yellow	Blue
595 – 605	Orange	Green-blue
605 – 750	Red	Blue-green

**Ranges selected at random because there are transition zones within the colour range.*

A selective absorption in the visible spectral range is necessary for the formation of colours.
If, for example, the violet-blue portion of the white light is absorbed from a body, the remainder of the colour (green and red-orange) is reflected; the body appears to be yellow. If all light rays are reflected, the body appears to be white and if all light rays are absorbed, the body appears to be black.

Chromatic triangle for colour matching

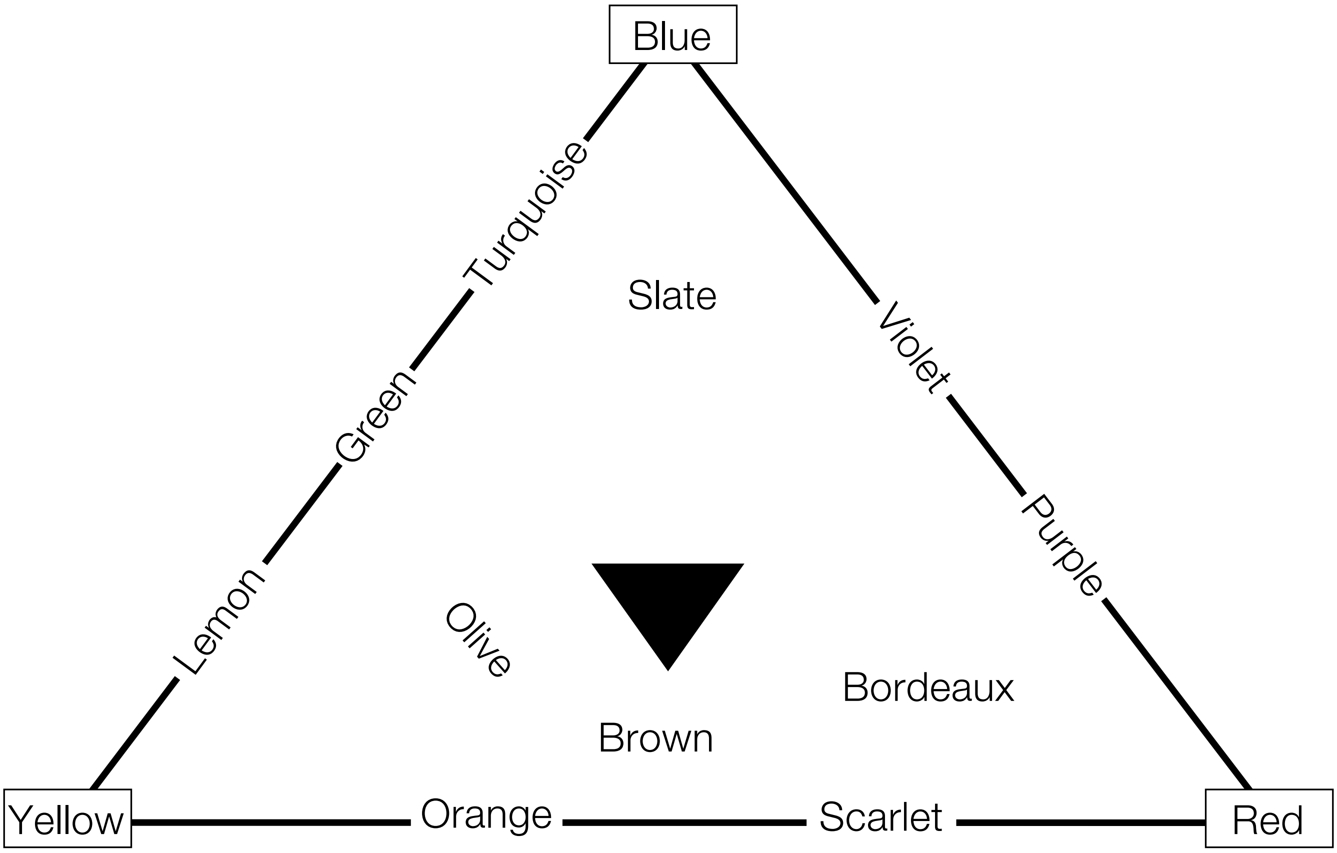

On the sides of the triangle are the shades obtained by mixing the pure spectral colours yellow and red, red and blue, blue and yellow.

The area within the triangle is occupied by the shades which contain components of all three basic colours.

CIE chromaticitiy diagram

(CIE = Commission International de l’Eclairage)

In the CIE system, the standard colour values are expressed in terms of chromaticity, i. e. X = redness, Y = greenness and Z = blueness. For the two-dimensional representation of colours, only the relative chromaticity values are specified:

relative redness $\bar{x} = \frac{X}{X + Y + Z}$

relative greenness $\bar{y} = \frac{Y}{X + Y + Z}$

relative blueness follows from $\bar{x} + \bar{y} + \bar{z} = 1$

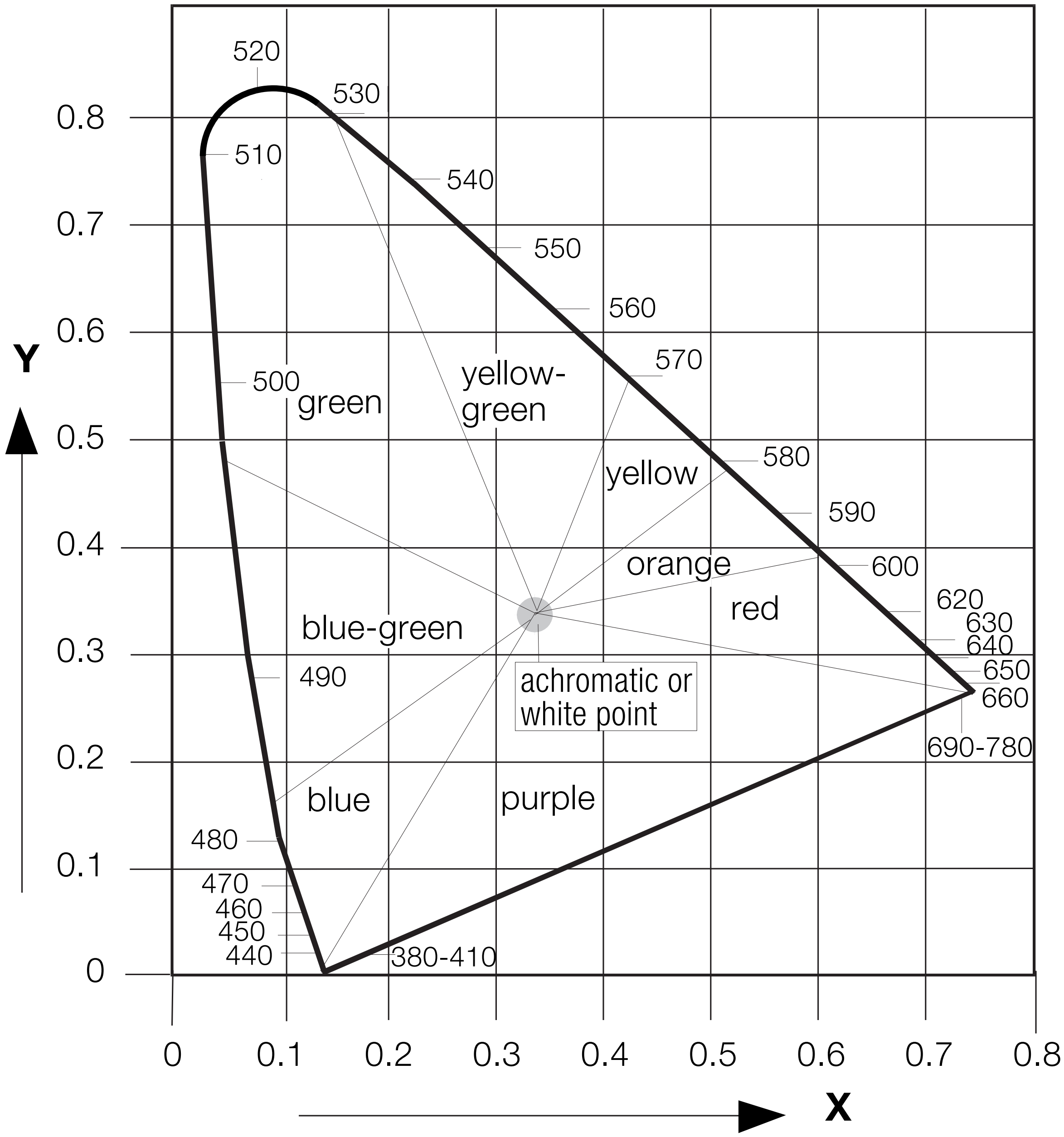
520
530
510
540
550
560
570
500
green
yellow-
green
yellow
580
590
orange
600
620
630
640
650
660
690-780
red
blue-green
490
achromatic or
white point
blue
purple
480
470
460
450
440
380-410
Y
0.8
0.7
0.6
0.5
0.4
0.3
0.2
0.1
0
0
0.1
0.2
0.3
0.4
0.5
0.6
0.7
0.8
X

CIELAB colour system (DIN 6174)

(Commission International de l’Eclairage LAB-System)

A system of colorimetric specification of shades, calculation of colour differences in colour matching and determination of minimum metamerism index or colour concentration and strength differences.

A colour can be fixed by the coordinates L, C, h.

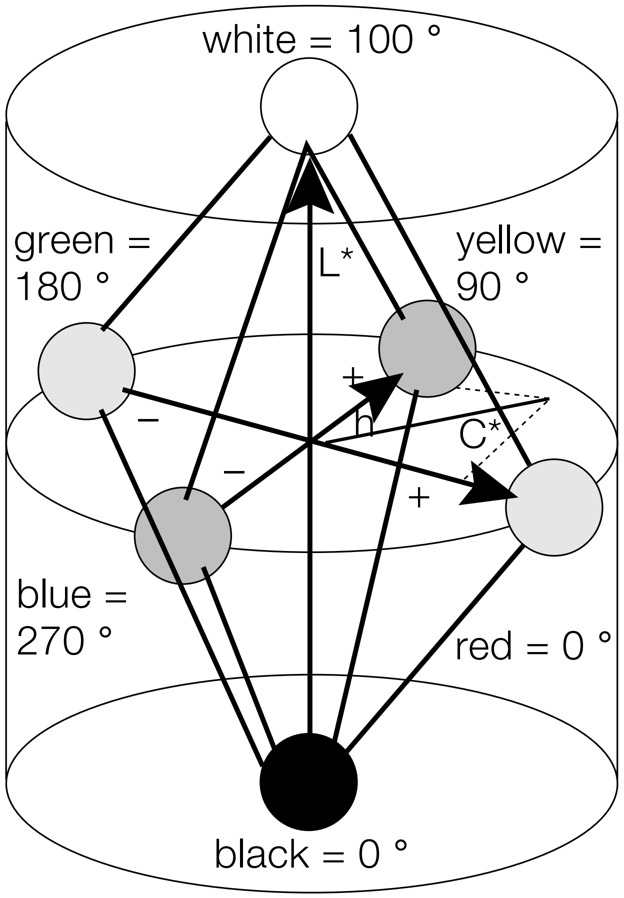

C = chromaticity
L = luminance
h = hue angle from 0° to 360°

DE* = colour difference

DH* = hue difference
(not angle difference)
+ = sample deviates in counting direction
– = sample deviates against counting direction

DC* = chromatic difference
+ = sample is purer
– = sample is duller

DL* = brightness difference
+ = sample is lighter
– = sample is darker

$$DE^* = \sqrt{(DL^*)^2 + (DC^*)^2 + (DH^*)^2}$$

CIELAB total colour space

For more information see the corresponding literature in chapter „Technical literature“.

Chemical classification of leather dyes

1. Nitro and nitroso dyes
2. Metallized and non-metallized azo dyes
   a. monoazo dyes
   b. polyazo dyes
3. Diphenyl and triphenyl methane dyes
4. Sulfur dyes
5. Phthalocyanine
6. Anthraquinone and multi-ring dyes
7. Natural dyes

Classification of leather dyes according to their application properties

1. Anionic dyes
   a. acid dyes
   b. direct (substantive) dyes
   c. special dyes
   d. dyes that can be dispersed in water
2. Cationic dyes
3. Oxidation dyes

BASF products for drum dyeing

Luganil Dyes (powder range)

Anionic dyes of uniform composition for all types of leather. Excellent coloristic properties and high fastness.

Luganil Yellow G	Clean, greenish yellow; metal-free.
Luganil Orange GGC	Yellowish orange.
Luganil Orange NG	Clean, yellowish orange; metal-free.
Luganil Orange NR	Reddish orange.
Luganil Light Brown NG	Pale, yellowish brown for all types of aniline leather (shoe uppers, upholstery leather and garment leather) with high lightfastness.
Luganil Brown GOL	Pale, slightly reddish brown, especially for all types of aniline leather (shoe uppers, upholstery leather and garment leather) with high lightfastness.
Luganil Brown NG	Vivid, slightly reddish medium brown. Metal-free, especially for finished garment leather.
Luganil Brown NK	Rich medium brown; for all types of finished leather.
Luganil Brown NGB	Rich, yellowish medium brown, especially recommended for all types of finished leather (shoe uppers, upholstery leather and garment leather) and for nubuck and suede shoe uppers.
Luganil Brown MFR	Brilliant, reddish medium brown, for shoe uppers (aniline, nubuck and suede), upholstery leather and garment leather (aniline and finished).

Luganil Olive Brown N	Yellowish olive brown. Iron-complex dye which enhances the lightfastness of all types of shoe uppers, garment leather, upholstery leather and automotive leather.
Luganil Brown NGT	Yellowish medium-to-dark brown. Iron-complex dye, especially recommended for all types of upholstery leather, automotive leather, garment leather and aniline shoe uppers.
Luganil Brown NT	Yellowish dark brown; Iron-complex dye, especially recommended for all types of shoe upper, upholstery and garment leather.
Luganil Brown NR	Slightly reddish dark brown; metal-free, for finished, nubuck and suede shoe uppers and finished upholstery leather.
Luganil Brown RL	Dark medium brown. Iron-complex dye, especially recommended for all types of shoe upper leather with high lightfastness, and for unfinished upholstery leather and garment leather.
Luganil Red Brown NB	Very reddish medium brown. Gives excellent results on aniline, nubuck and suede shoe uppers, unfinished upholstery leather, garment leather and automotive leather.
Luganil Red NG	Fiery, yellowish red; metal-free.
Luganil Red EB	Slightly bluish red; metal-free, with comparatively high lightfastness.
Luganil Bordeaux B	Neutral shade of bordeaux.
Luganil Blue NL	Clean, vivid medium blue.
Luganil Blue NGR	Neutral, vivid blue; metal-free.
Luganil Blue N	Slightly reddish blue.
Luganil Dark Blue NB	Navy blue; metal-free.

Luganil Green NG	Vivid, yellowish green.
Luganil Dark Green N	Dark green dye with high colour strength, metal-free.
Luganil Grey GC	Yellowish shade of grey.
Luganil Black CN	Slightly reddish black. Recommended for improving the lightfastness of aniline, nubuck and suede shoe uppers and all types of upholstery, automotive and garment leather.
Luganil Black NT	Intense, metal-free black dye. Recommended for all types of shoe upper, upholstery, automotive and garment leather.

Luganil Dyes Liquid

The Luganil Dyes Liquid are low salt anionic dyes possessing high colour strength and high-level dyeing properties. They are suitable for dyeing all types of leather.

Luganil Yellow Brown CL Liquid	Pale, yellowish brown.
Luganil Orange 2R Liquid	Reddish orange.
Luganil Brown BL Liquid	Slightly reddish dark brown.
Luganil Red GL Liquid	Slightly bluish red.
Luganil Bordeaux RB Liquid	Neutral shade of bordeaux.
Luganil Blue MRB Liquid	Slightly reddish blue.

Luganil Black AS Liquid	Neutral to slightly bluish black; metal-free dye for dyeing leathers that are required to fulfil high standards of fastness, such as automotive leather.
Luganil Black SL Liquid	Greyish black. Recommended for aniline shoe uppers and all types of upholstery, automotive and garment leather with high lightfastness.
Luganil Black TSU Liquid	Deep, neutral, metal-free black dye. Recommended for all types of leather, including shoe upper, upholstery, automotive and garment leather.

Lurazol Dyes

A range of anionic dyes which includes dyes of uniform composition and mixtures. Can be used to dye all types of leather.

Lurazol Beige LF	Neutral beige.
Lurazol Brown N3G	Slightly reddish brown, especially appropriate for finished shoe uppers and nubuck.
Lurazol Brown SEDK	Reddish violet shade of brown; metal-free.
Lurazol Dark Brown B	Slightly yellowish dark brown, metal-free, for finished garment leather, upholstery leather and shoe uppers.
Lurazol Red BN	Slightly bluish red.
Lurazol Red SB	Bluish red; metal-free.
Lurazol Bordeaux EBD	Violet shade of bordeaux; metal-free.
Lurazol Brilliant Blue S2G	Clean, vivid blue; metal-free.
Lurazol Brilliant Blue SBN	Brilliant, clean blue; metal-free.

Lurazol Blue EBL	Reddish navy blue; metal-free.
Lurazol Green SEG	Bluish green; metal-free.
Lurazol Green M2GL	Bluish green.
Lurazol Black HS	Neutral to slightly reddish black; metal-free. For all types of leather that are to be dyed to deep black shades.
Lurazol Black VB	Slightly reddish black, metal-free. Excellent penetration through all types of leather.
Lurazol Black MRN New	Reddish black, metal-free. Recommended for finished shoe uppers, nubuck and suede and for finished upholstery and garment leather.
Lurazol Black S3T	Deep, neutral black, metal-free. Improves the buffability of nubuck and suede.
Lurazol Orange EBR Liquid	Neutral shade of orange, especially for leather fibre board.
Lurazol Black BAG Liquid New	Slightly bluish black.
Lurazol Black RS Liquid	Reddish black. Recommended for aniline, nubuck and suede shoe uppers and for all types of upholstery, automotive and garment leather.
Lurazol Black P Liquid	Special finely dispersed preparation of a metal-free, neutral black pigment with high colour strength. Improves penetration and colour strength in combination with black dyes from the Luganil and Lurazol ranges and enhances levelling, lightfastness and coverage of defects. Recommended for all types of finished shoe upper, upholstery, automotive and garment leather.

Selected Lurazol and Luganil Dyes with particularly good penetration

1. **Special Lurazol Dyes:**

   Lurazol Black P Liquid

2. **Luganil Dyes in the brown range:**

   Luganil Brown NK
   Luganil Brown NGB
   Luganil Brown NGT
   Luganil Brown NR
   Luganil Brown NT
   Luganil Brown RL

3. **Luganil Dyes in the coloured range:**

   Luganil Red Brown NB
   Luganil Red NG
   Luganil Blue NL
   Luganil Blue NGR
   Luganil Green NG
   Luganil Dark Green N

BASF basic dyes

Cationic charge. Give full shades on anionic substrate.

Leather Black VM Liquid	Cationic dye, metal-free. Intense, reddish black.

Dyeing auxiliaries

Anionic products	Levelling agents for anionic dyes; Fixing agents for cationic dyes.
Tamol GA	Lightfast anionic levelling agent for leather dyed to dark shades with anionic dyes. Mordant for basic dyes.
Tamol M/Tamol MB	Anionic dispersing and levelling agents for improving the penetration of anionic dyes and tanning agents.
Tamol PM Liquid	Anionic dispersing and levelling agent. Promotes dye penetration.
Tamol NA	Dispersing agent with a pronounced buffering effect for retanning agents and dyes. Enables leather to be dyed to intense, level shades.
Tamol NNOL	Lightfast anionic levelling agent for pale shades dyed with anionic dyes.
Tamol NNI	Dispersing and levelling agent. Promotes the penetration of dyes through chrome-tanned leather and wet white leather and gives more level shades.
Densotan A	Anionic polymer solution used to boost penetration and levelling. Can also be used to wet back crust.

Cationic products	Fixing agents for anionic dyes; Levelling agents for cationic dyes.
Tamol R	Weakly cationic dyeing auxiliary used to promote penetration and improve levelling on slightly retanned chrome leather. Negligible brightening effect.
Bastamol B	High-performance cationic fixing agent for anionic dyes, fatliquors and tanning agents. Enhances washfastness and perspiration resistance.
Bastamol DRN	Cationic fixing agent supplied in liquid form. Especially effective for improving the washfastness and perspiration resistance of leathers dyed with anionic dyes. Can be used to deepen shades, especially black.
Lipamin OK	Cationic auxiliary used to reverse the charge and deepen the shade of anionic dyes. Can also be used to fix anionic dyes.

Special products	
Amollan IP	Water-miscible penetrator for impregnating and spray staining.
Eusapon S	Nonionic surfactant for wetting back crust.
Eusapon W	Low-foaming surfactant for wetting back crust.
Lipoderm N	Anionic levelling agent and dispersing agent with a slight fatliquoring effect.

Dyeing methods

1. Drum dyeing (drum, mixer, three-chamber automatic dyeing machine)
   a. Dyeing in hot float
      Most frequently used method.
   b. Dyeing without float (dry or powder dyeing)
      Effects accelerated penetration. To achieve good levelness of shade the temperature should not exceed 25 °C.
   c. Dyeing in steps (sandwich dyeing)
      Depth of shade is improved by adding acid or cationic dyeing auxiliary between two dye additions.
   d. Effect dyeing
      Production of cloudy, patchy or marbled dyeings with two- or multitone effects.
   e. One-side drum dyeing
      Reverse side resisting with special polymer products.

2. Paddle dyeing
   Dyeing in long floats. Mainly used for dyeing wool sheep skins to prevent felting of the wool.

3. Dyeing in the through-feed machine (Multima)
   Dip dyeing of crust leather; very short immersion time in dye liquor.

4. Colouring by curtain coater

5. Colouring by roll coater

6. Colouring by screen printing
   A printing paste is pressed by means of a squeegee onto the leather through a fine screen with a negative pattern (mono- or multicoloured).

7. Spray staining
   Application of dye solutions by means of a compressed air spraygun. Depth of penetration is regulated by the addition of organic solvents or penetrators.

8. Tray dyeing and brush staining. Methods only seldom used nowadays.

Parameters of dyeing in the production of high-quality leathers

Quality requirements:
1. Perfect levelness of shade
2. Maximum depth of shade achieved with minimum amount of dye
3. Good covering of defects
4. High colour fastness
5. Complete dye penetration

Influencing factors

1. **Neutralization:**
   a. Uniform neutralization is essential (overneutralization and unsatisfactory neutralization should be avoided).
   b. Increasing the pH value improves penetration in dyeing and retanning, but reduces the absorption of dyes.
   c. Addition of masking products also improves penetration of dyes and retanning agents and reduces absorption rate of dyes (as in b.). They may have a bleach effect and improve the levelness of shade (overneutralization may impair the levelness).

2. **Retanning:**
   a. Purely chrome tanned leather has the highest affinity for anionic dyes.
   b. Any retanning changes the absorption behaviour and fixation of anionic dyes.
   c. Conventional self-tanning, white-tanning and polymer tanning agents reduce the affinity and give level but bleached shades. High amounts may impair dye fixation and may result in unlevelness during drying.

Depth of shade in relation to retanning

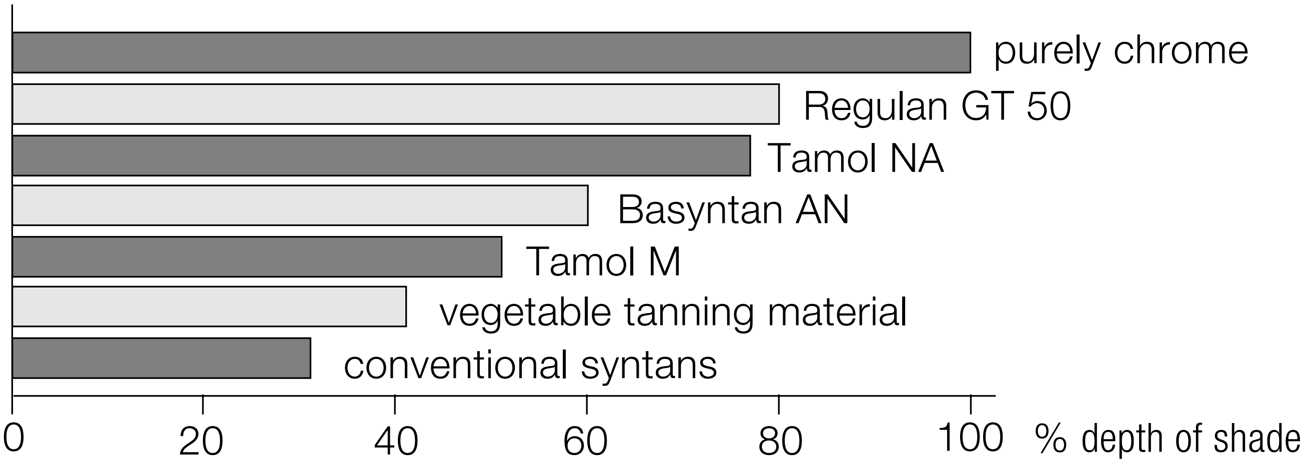

3. **Fatliquoring:**
   a. Higher sulfited or sulfochlorinated fatliquors may reduce the absorption properties and/or cause stripping of dye.
   b. Depending on the kind and amount of emulsifying components, improved penetration and levelness of shade can be achieved with reduced depth of shade (e. g. Densotan A, Densodrin EN, or Lipoderm N).

4. **Dyeing auxiliaries:**
   a. Anionic products have a levelling effect on anionic dyes and a fixing effect on cationic dyes.
   b. Cationic products have a levelling effect on cationic dyes and a fixing effect on anionic dyes.

5. **Choice of dyes:**
   Dyes that are used together in a dyeing formulation must be combinable with each other, as otherwise unlevel shades will result. Combinability is dependent on
   - chemical structure,
   - absorption rate of dyes,
   - build-up properties of dyes,
   - kind of retanning.

   Improvements may be achieved by the use of dyeing auxiliaries, such as Tamol R, Tamol NNOL, Tamol M.

6. **Addition of dyes:**
   a. Addition in dissolved form is beneficial, particularly for high-quality aniline dyeings.
   b. Addition of dyes in several portions increases the depth and levelness of shades.

7. **Float length:**
   High float lengths promote distribution of dyes and auxiliaries.
   Particularly important:
   - if affinity of dyes or auxiliaries is high,
   - if chamber dyeing vessels are used.

8. **Dyeing temperature:**
   a. High dyeing temperatures increase the affinity and absorption rate of dyes (may impair levelness of resulting shades on retanned leathers) and improve fixation of dyes.
   b. Low dyeing temperatures promote distribution of dyes during dyeing process and reduce fixation of dyes.
   c. The optimum procedure is to maintain a low temperature (30 °C) at the beginning of the dyeing process and a high temperature (> 50 °C) towards the end of the dyeing process to fix the dyes.

Absorption rate in relation to temperature
Example showing Luganil Brown NT at a pH value of 6.5

	Dye absorbed after 5 min	10 min	20 min	30 min
at 30 °C	55 %	70 %	86 %	92 %
at 50 °C	62 %	74 %	87 %	93 %

9. Fixation:

a. Addition of formic acid in one portion only if dye is extensively absorbed. If dye is still contained in the dyebath, addition should be made in several portions, as otherwise levelness is impaired.
b. Running time after addition of formic acid is dependent on thickness and pH value of leathers. If running time is too short, poor fixation of dyes and unsatisfactory levelness of shades will result.

c. Fixation with strongly cationic products (Bastamol B, Bastamol DRN) should, in principle, be carried out in a fresh bath. Before addition of fixing agents, the fixing bath should contain only the least amounts of dyes, as otherwise the fastness to wet and dry rubbing is impaired. The amount to use is dependent on the amount of dye employed, and on the thickness and type of leather (grain leather, suede).

Through-feed dyeing machine

(Multima-type = Staub patent)

Principle: the crust leather to be dyed is passed through a heatable dye solution. The penetration achieved depends on the dyeing conditions.

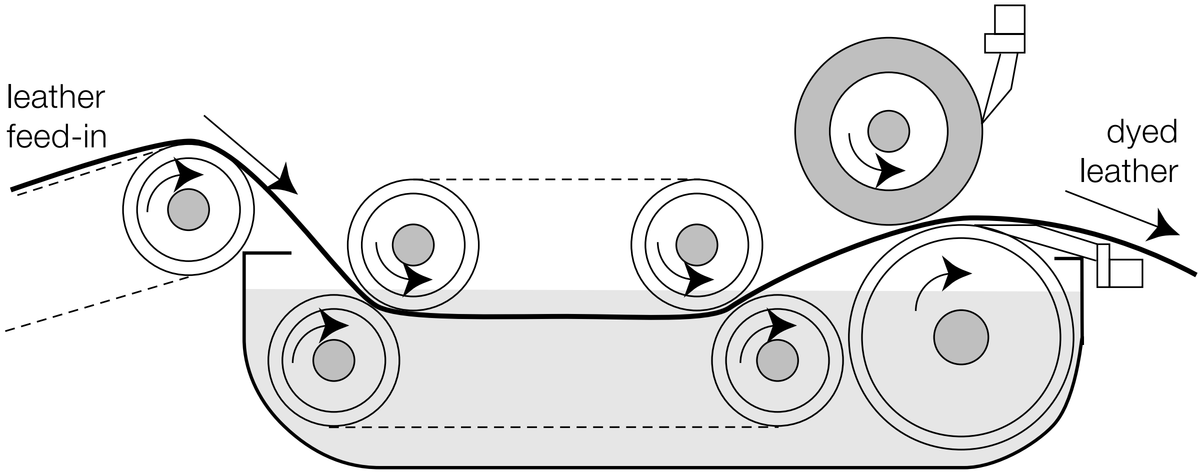

Advantages compared to drum dyeing:

1. More rapid production of dyeings starting from crust leather.
2. Less water and energy required.
3. Good penetration.
4. The processing operations samming, setting out and toggling become superfluous.

Drying

Drying methods for leather

1. Air-drying without supply of energy (hang-drying)

2. Air-drying with supply of energy
    a. air circulation method (hang-drying)
    b. drying in channel, tunnel, chamber (hang-drying)
    c. wet-toggled drying
    d. paste drying

3. Hot water drying
    a. Secotherm process (paste drying)

4. Infrared drying

5. Vacuum drying

6. High-frequency drying

Air humidity

1. Maximum air humidity:
   = maximum amount of water vapour in gram contained in 1 m^3 air at a certain temperature (saturation capacity).

° C	g/m^3	°C	g/m^3
−20	1.06	35	39.5
−10	2.30	40	50.9
− 5	3.36	45	64.9
± 0	4.89	50	82.7
5	6.80	55	105.0
10	9.4	60	130
15	12.8	70	197
20	17.2	80	293
25	23.0	90	419
30	30.2	100	590

2. Absolute air humidity:
   = the actual amount of water vapour in gram present in 1 m^3 air.

3. Relative air humidity (in percent)

$$\text{R.H. \%} = \frac{\text{absolute air humidity in g/m}^3}{\text{maximum air humidity in g/m}^3\text{ (saturation capacity)}}$$

Various moisture contents of leather

Ready for shaving	= 30 – 45 % moisture
After drying	= 8 – 14 % moisture
After conditioning	= 18 – 22 % moisture
After sawdusting (moistening)	= 26 – 32 % moisture

Machines for dry finishing – operating principles

Jaw-type staking machine

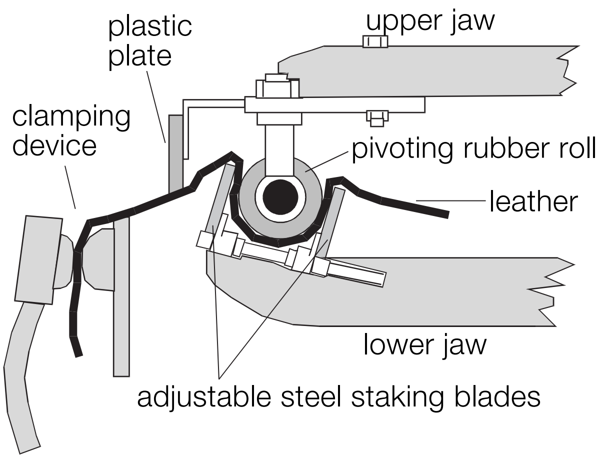

Vibration staking machine (Mollisa type)

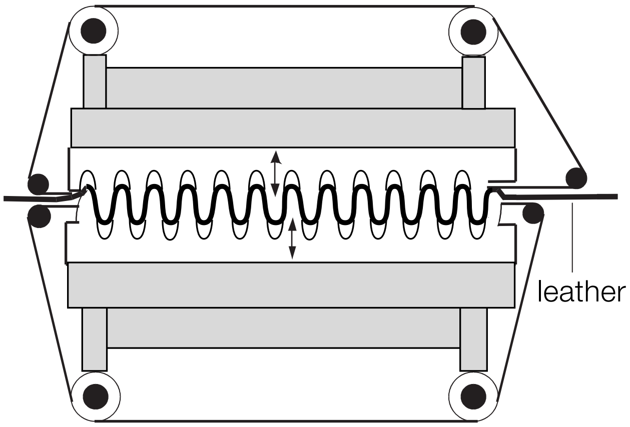

Air-blast dedusting machine

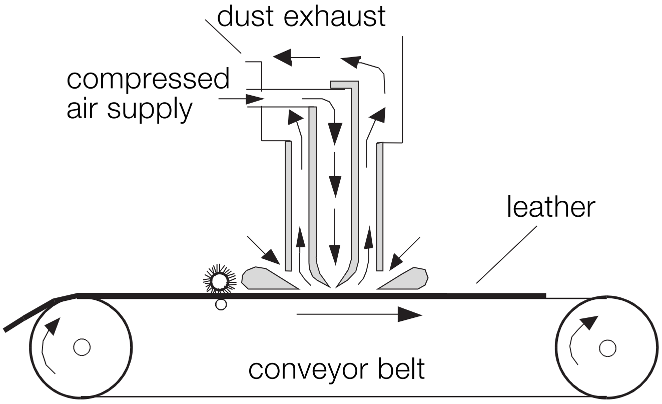

Through-feed buffing machine

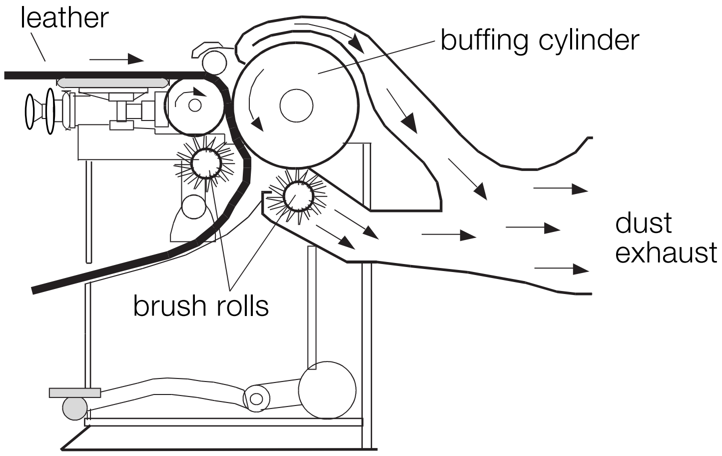

Flow chart of processes from wet blue to dry finishing

Wet blue – shaved
α
Washing
α
Neutralizing
α
Washing
α
Retanning
α
Dyeing
α
Fatliquoring
α
Fixing
α
Horsing up
α
Setting out
α
Drying
α
Conditioning
α
Staking
α
Toggling
α
Trimming
α
Sorting for finishing

The order in which the individual processes are carried out can be varied to produce the type of leather desired.

Finishing

The term "finishing” is used in the leather industry to describe a whole series of processes and operations which improve the properties and appearance of the leather and finally turn it into that exquisite material. It is the final chemical and mechanical treatment of the leather before manufacturing end products (shoes, bags, wallets, clothes, etc.).

Purpose

To improve the use serviceability of the leather in general by:

- protecting it from damage by water, soil and mechanical action;
- improving its physical properties such as its lightfastness and rub fastness
- levelling out patches and grain faults;
- applying an artificial grain layer to splits or corrected grain leathers;
- modifying the surface properties (shade, lustre, handle, etc.).

Finishing is often used to obtain fashionable effects.

Classification of finishes

a. According to the finishing techniques:
    - Spray finish: Finishes applied exclusively by spraying.
    - Roll coating finish: Applied by screen rollers or engraved rollers.
    - Curtain coating finish: Highly covering coats applied to such leathers as corrected grain or splits.
    - Padding
    - Film transfer finish: Polymer foils or lamination. Also made with two component PU mixtures on coating machine (direct or reverse process).
    - Glaze finish: Glazing machine and non-thermoplastic binders. High quality leathers.
    - Plate finish: Different types of plating machines. High gloss and smooth films.
    - Glaze/plate finish: Combination of both.
    - Embossed finish: Artificial or fancy grain by embossing.
    - Foam finish: Highly covering finish especially for furniture and car seat leathers.

b. According to the finishing effects:
  - Corrected grain finish: Buffed leathers with high covering finish, embossed.
  - Aniline finish: Unpigmented transparent coats. Natural appearance of the grain.
  - Semianiline finish: Small amounts of pigment and/or dyes mixed together with binders or covering base coat plus aniline top coat with dyes only.
  - Opaque finish: Covering pigments and binders.
  - Brush-off finish: Two-tone effect that appears after using a felt polishing disk.
  - Easy-care finish
  - Antique finish: Irregular two-tone effect normally made by applying waxes.
  - Fancy finish
  - Two- or multi-tone finish: Applied in two or more finishing coats of different colours by angle spraying, padding or printing.
  - Invisible finish: Impression of unfinished surface using light coats and mechanical operations.
  - Craquele finish: Cracked effect.

c. According to the main finishing material used:
  - Polymer or binder finish: The most common. Applying formulations of thermoplastic binders based on polyacrylate, polyurethane or polybutadiene and subsequent plating.
  - Casein finish: Non thermoplastic protein or protein-like products for glazed finishing.
  - Nitrocellulose solution or emulsion finish: Solvent lacquer. Film forming material is nitrated cellulose dissolved in organic solvents. Emulsion lacquers are water dilutable.
  - CAB-finish solvent lacquer based on cellulose aceto-butyrate. Better resistance to yellowing than nitrocellulose.
  - Patent finish: Thick polyurethane lacquer coat, high gloss finish.

General structure of finish

Spray staining	Spray staining e.g. with Eukesolar Dyes 150 Liquid, to colour the surface of undyed leather or to level drum dyed shades.
α	
Grain impregnation	Impregnation, e.g. with Corial Binder IF and Amollan IP, to tighten the grain and impart a settled appearance and smoothness to the surface.
α	
Adhesive coat	The adhesive coat consists of pigments, binders and auxiliaries to ensure good adhesion of the whole finish coat. Today generally aqueous systems are used for adhesive coats.
α	
Base coat (pigmented)	The (pigmented) base coat is usually harder than the adhesive coat. It imparts the desired appearance to the leather and levels out the surface. Today generally aqueous systems are used for (pigmented) base coats.
α	
Top coat	The top coat determines the final appearance and the handle of the leather surface and has a decisive influence on the fastness properties of the finish.

Leather finishes and dyes

Brightening dyes

Used together with pigment finishes of high covering power or alone in top coating mixtures to enhance the brilliance of plate and glaze finishes or of spray and brush stained shades.

The brightening dyes should meet the following requirements:
- compatibility with finishing agents,
- good light fastness,
- fastness to bleeding and hot plating,
- good fixing properties,
- fastness to alkali and formaldehyde,
- low content of extenders.

1. Water-soluble or water dilutable brightening dyes
   Chiefly the Eukesolar Dyes 150 Liquid are used and to a less extent selected anionic dyes of the Luganil and Luganil Liquid ranges or colour lakes (about 2 parts anionic dye stirred together with 1 part basic dye in dissolved form at boiling temperature).

2. Solvent-soluble brightening dyes
   Eukesolar Dyes 150 Liquid

BASF dyes for spraying, curtain coating and printing and for shading finishes

Eukesolar 150 liquid dyes
Special metal complex dyes of uniform composition dissolved in an organic solvent. They can be diluted with water or with solvents. Mainly used for spraying, curtain coating, roll coating and printing. Can also be used for dyeing and shading finishes and for printing designs on leather. Dyes of this type are distinguished by their high brilliance, high lightfastness and resistance to spotting by water droplets.

Eukesolar Yellow G 150 Liquid	Greenish yellow.
Eukesolar Yellow R 150 Liquid	Reddish yellow.
Eukesolar Orange R 150 Liquid	Neutral orange.
Eukesolar Red G 150 Liquid	Neutral red.
Eukesolar Red B 150 Liquid	Bluish red.

Eukesolar Rubine B 150 Liquid	Bluish rubine shade of red.
Eukesolar Brown 2G 150 Liquid	Yellowish brown.
Eukesolar Brown 5R 150 Liquid	Reddish brown.
Eukesolar Brown 2RG 150 Liquid	Violet shade of brown.
Eukesolar Brown R 150 Liquid	Dark brown.
Eukesolar Brilliant Blue 150 Liquid	Strong, deep blue.
Eukesolar Navy Blue R 150 Liquid	Slightly reddish dark blue.
Eukesolar Black R 150 Liquid	Deep, neutral black.
Eukesolar Black 2R 150 Liquid	Very deep, reddish black.
Eukesolar Blue FL Liquid	Slightly greenish blue.

Pigment colours

In contrast to dyes (only absorption) pigment colours act by absorption and dispersion, giving rise to an overall reflection. In leather application mostly liquid pigment preparations with constant colour strength and coloristic properties are used. By blending different base colours to the final shade, a high flexibility of colour processing is achieved.

Inorganic pigments perform generally well with respect to covering, which is important for correction of grain defects or if a high colour consistency is requested (automotive leather). Special attention should be paid to the use of pigments containing toxic heavy metals (mercury, cadmium, lead, chromate VI, etc). Of course, these materials are subject to regulations concerning consumer care (e. g. children articles). Some pigments carry special fastness restriction, e. g. fastness to sulfide, cleaning agents with strong complexing compounds (e.g. EDTA) or alkaline pH (soap), as well as the ability to interact with vegetable tanning agents. Certain pigments can start crosslinking butadiene binders by initiating radical reactions which leads finally to a stiff and brittle film.

1. Earth colours

White	Gypsum (calcium sulfate) Chalk (calcium carbonate) Barite white (barium sulfate) Barium carbonate
Yellow	Yellow ochre (ferric hydroxide)
Brown	Terra di Siena (clay with ferric hydroxide) Umber (manganese-containing iron ore)

Red	Red ochre (various iron oxides)
Green	Ferric silicate
Grey	Graphite (carbon), slate

2. Mineral colours (synthetic pigments)

White	Titanium white (titanium dioxide): Rutile, Anatas
Yellow	Chrome yellow (lead chromate) Bismuth vanadate
Red	Chrome red (molybdenum-modified lead chromate)
Brown	Processed iron oxides
Green	Chromium oxide green Chromium hydroxide green
Blue	Cobalt blue (cobalt/aluminium oxide) Ultramarine blue (silicium/aluminium oxide) Manganese blue (barium manganese oxide)
Black	Various carbon blacks

Organic pigments perform mostly well in brilliance and brightness, but covering is usually poor. Applied often in transparent effect prints. Covering is maintained by combination with covering inorganic pigments or special additives, i.e. pigment extenders, also matting agents improve covering a lot.
Due to their organic structure, bleeding with plasticizers is sometimes possible and tested as migration fastness. If above-average demands are made on the fastness of the leather (e.g. as requested for automotive leather according to ISO 105 B06) lightfastness and heat resistance should be tested in advance.

BASF pigment preparations

They are used to give the desired covering and colour, especially in bottom coats and seasons in the finishing process.

Lepton Colours N

Aqueous, casein-free pigment preparations that do not obscure the grain pattern by overloading of the grain. With Lepton Colours N no embrittlement of the base coat is observed. They are distinguished by high coverage, high fastness properties (e.g. wet rubfastness, lightfastness, resistance to migration) and are extremely ageing resistant.

Lepton White N	Clean, neutral white.
Lepton Yellow N	Vivid pale yellow.
Lepton Yellow GN	Greenish yellow; free of lead chromate.
Lepton Caramel N	Yellowish pale brown.
Lepton Brown GN	Full reddish brown.
Lepton Dark Brown N	Chocolate brown.
Lepton Red N	Vivid, neutral red.
Lepton Red BN	Slightly bluish red; free of lead chromate.
Lepton Red Violet RN	Bluish red.
Lepton Blue N	Deep, neutral blue.
Lepton Black N	Neutral black.
Eukesol Brilliant Black HSN	Deep black for clear glazed finishes.

Coloured top coating agents

Corial EM Base Black DK	Black nitrocellulose pigment preparation for gloss effects. Can be diluted with water or organic solvents. Very versatile and very easy to use, and top coats based on this product have high mechanical fastness.
Corial EM Finish Black	Nitrocellulose emulsion. For top coats with a pronounced filling effect and excellent fastness.

Thermoplastic binders

Acrylic binders are dispersions mainly of polyacrylic, and polymethacrylic esters, usually produced by radical initiated emulsion polymerization of the unsaturated monomers.

Butadiene binders are usually produced by radical initiated emulsion polymerization of the unsaturated monomers butadiene, and styrene. There is only one of the two unsaturated functions of butadiene used for polymerization, so the polymer still contains double bonds for later reactions (e.g. crosslinking by radical initiated reactions with light, or special metallic impurities of pigments).

PU (Polyurethane) binders: The polymers are produced in a two (or more) step process by poly-addition reaction of poly-isocyanate compounds and –OH terminated poly-ol compounds of varying molecular weight. Typical isocyanates often used are aromatic TDI (toluylen-di-isocyanate), and MDI (methylene-diphenyl-isocyanate), or aliphatic IPDI (iso-phorone-di-isocyanate), and HDI (hexamethylene-diisocyanate) respectively. As OH-functional compounds different small molecular weight diols like butanediol-1,4, hexanediol-1,6 are used as well as polyester-polyols from dicarbonic acids (e.g. adipic acid) and ethyleneglycol or polyetherpolyols like polypropyleneoxide/ethyleneoxide copolymers.

Solvent based reactive systems consist of corresponding, in a non-reactive organic solvent dissolved isocyanate compound (hardener) and polyol. Mixing and reaction of the two components form the polymer during the application, a classical two-component (2-K-)-system.

Dispersion: High molecular weight polymers which are non-soluble in water form aqueous dispersions (like natural latex) if the polymer particles are appropriately stabilized. The particle size of a dispersion will generally affect some properties: the finer the particles, the clearer the appearance at a given concentration will be, or, the coarser a dispersion is, the whiter it will be as a liquid. On the other hand, at the same concentration, smaller particles will lead to a higher viscosity compared to larger ones of the same composition.

Polymer films are formed from dissolved or dispersed polymers by drying.
In case of dissolved polymers, "lacquers”, this process is continuously forming a homogeneous polymer film.

In case of polymer dispersions certain stages of drying are postulated until at least the polymer particles will coalescence under the action of capillary forces. This type of film formation is highly affected by proper process, and temperature control.

Film values are property values measured at polymer films. Most common are hardness (Shore A or D), glass transition (sometimes melting) temperature, low temperature break temperature, elongation at break/tear strength (or E-modulus), water uptake etc. Most data are typical for a polymer performance in comparison. Yet careful interpretation is necessary as the absolute data are highly sensitive to side parameters like sample size (mostly much thicker as the actual filmthickness in a finish!), shape, conditioning (air humidity!), preparation (temper effects!), etc.

Plasticizers are additives mostly used to lower the Tg of a given polymer to improve film formation, softness, and other properties. Plasticizers are well known from cellulose-ester, and PVC technology, where they play an important role in the overall polymer formulation. In modern aqueous binder technology, certain "solvent" or "VOC" compounds perform as temporary plasticizer during film formation.

VOC, abbreviation for Volatile Organic Compounds, are often so-called solvents with a certain vapour pressure, which are emitted to atmosphere during or after the application process. Nowadays in a lot of countries VOC are subject of regulations for ecological reasons (smog-formation, greenhouse warming).

HAPS, abbr. for Hazardous Air Polluting Substances, are special VOC listed in inventories by authorities in USA.

Tg, abbreviation of "glass (transition) temperature”, an important property of thermoplastic polymers, connected to minimum film formation temperature (MFT) as well as low temperature flexibility. Polymers with a Tg lower than ambient perform generally more "soft”, polymers with a higher Tg more "hard” or "stiff”. Typical Tg’s of some one-monomer-based polymers are given in the table. By random copolymerization of different monomers intermediate values are achieved (internal plasticizing). By block copolymerization, in situ mixtures of different polymer building blocks are possible having each its own Tg, so-called 2 (or more) step polymers.

The main basic substances for the production of polymer binders

Basic substance	Abbreviation	Tg*)
Cis-butadiene	Bu	– 100 °C
2-Ethylhexyl acrylate	EHA	– 62 °C
Hexyl acrylate	HA	– 57 °C
n-Butyl acrylate	BA	– 45 °C
Ethylacrylate	EA	– 24 °C
Vinylidene chloride	VDC	– 18 °C
Iso-butyl acrylate	iBA	– 10 °C
Vinyl propionate	VPr	+ 5 °C
Methyl acrylate	MA	+ 6 °C
Lauryl acrylate	LA	+ 15 °C
n-Butyl methacrylate	BMA	+ 27 °C
Vinyl acetate	VAC	+ 28 °C
t-Butyl acrylate	tBA	+ 35 °C
Ethyl methacrylate	EMA	+ 65 °C
Styrene	St	+ 100 °C
Acrylonitrile	AN	+ 105 °C
Methyl methacrylate	MMA	+ 105 °C
Acrylic acid	AS	+ 165 °C
Acryloamide	AM	+ 165 °C
Methacrylic acid	MAS	+ 228 °C
Methacrylamide	MAM	+ 243 °C

**) Tg = glass transition temperature at which the physical properties of the polymerized base substance, such as refraction index and density, undergo a change and a transition of the polymer from a glass-like to a plastic condition takes place.*

The Tg of a polyurethane molecule is made up by several facts: PU molecules have a segmented structure: There are hard segments and soft segments. Therefore at least two values of Tg (for each segment at least one) can be found. For the cold flex behaviour of the polymer, the lower of the two values is important. When PU molecules form a film there are also interactions between different molecules. These interactions lead to the phenomenon that no discrete Tg value can be measured, but a broad region where the glass transition takes place.

In leather finishing a formulation of different polymers, pigments and fillers is used, crosslinked by a reactive crosslinker. The Tg values of each component are not additive. Therefore a cold crack temperature can not be calculated by summing up the Tg values of the components of the finish.

Base coating agents and binders

1. BASF acrylic binders (aqueous)

All Corial Binder types are supplied as aqueous polymer dispersions.

Leather Ground F	Acrylic polymer solution. Penetrates deeply into the leather and tightens the grain. Impregnating agent for full-grain and corrected-grain leathers.
Corial Binder IF	Finely divided, flexible and water-resistant. Used in impregnation and in pigmented coats.
Corial Microbinder AM	Finely divided; for aniline-type finishes with a natural break and high coverage for defects.
Corial Binder DN	Very soft binder with excellent flexibility at low temperatures. Gives finishes with a good fill and high flexometer values. Gives leather with a natural, elegant break.
Corial Binder BAN	Forms tough and highly flexible films of low-tack. It gives finishes with a natural, elegant appearance and very high fastness.
Corial Binder ON	Forms a soft film with low-tack. Can be thickened with ammonia.
Corial Binder OBN	Forms a soft, stretchy film with low tack.
Corial Binder OT	Forms a very flexible, low-tack film. Finish has a dry, pleasant handle. Especially appropriate for all types of aniline leather.
Corial Binder OK	Forms a soft, very elastic film with low tack. Gives finishes with high wet fastness. Very versatile.
Corial Binder AS	Forms a strong, fairly rigid film. Undergoes a very large increase in viscosity when ammonia is added. Excellent combinability with casein binders for glazed finishes. Used as an additive in curtain coating and to adjust the viscosity of finishes.

Application performance of acrylic binders

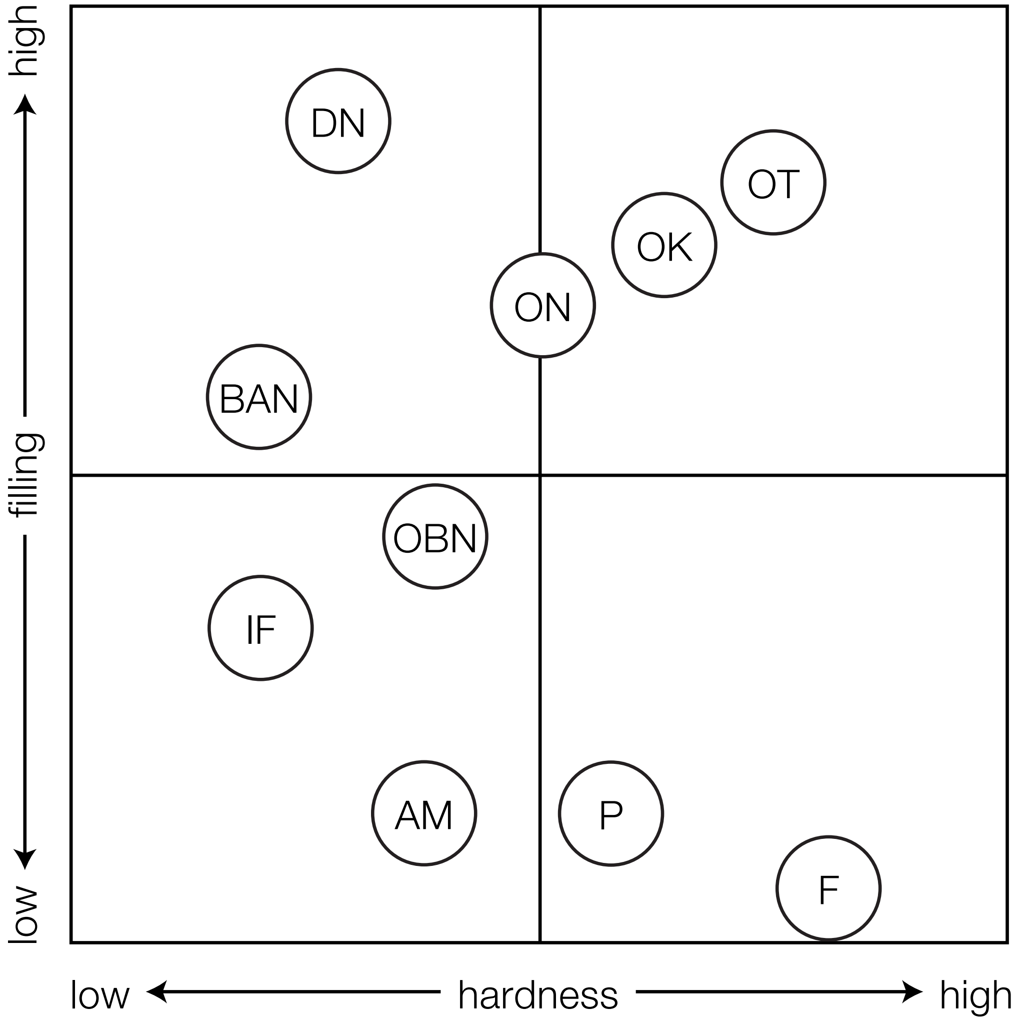

In the following tables the acrylic binders marked with • are especially recommended to achieve very high levels of the indicated application performance and fastness properties.

	Fineness of grain	Fullness	Penetration	Embossability	Low tackiness
Leather Ground F	●		●		
Corial Binder IF	●		●		
Corial Microbinder AM	●				
Corial Binder DN	●	●			
Corial Binder BAN	●			●	●
Corial Binder ON		●			
Corial Binder OBN		●			
Corial Binder OT		●		●	●
Corial Binder OK				●	●
Corial Binder AS					●

Fastness performance of acrylic binders

	Dry flex	Wet flex	Cold flex	Soaking resistance	Dry adhesion	Lightfastness
Leather Ground F					●	
Corial Binder IF	●	●		●	●	
Corial Microbinder AM	●					
Corial Binder DN	●	●	●		●	●
Corial Binder BAN	●	●	●		●	●
Corial Binder ON	●					●
Corial Binder OBN	●					●
Corial Binder OT	●					●
Corial Binder OK	●			●		
Corial Binder AS						●

2. BASF compact binders

The Lepton Binder types are so called compact binders, i. e. special formulations of binders, fillers and waxes for easy use in standard applications.

Lepton Binder NA	Very finely divided compact binder for finishing full-grain leather. Does not impair the natural appearance and handle of the leather.
Lepton Binder LF	Special binder with high fastness. Gives smooth finishes with a good fill and a natural handle. Recommended for finishes that incorporate water-based top coats.
Lepton Binder SD	Compact binder with a very pronounced filling effect on full-grain leathers and splits. Very high fastness and easy to use. Especially recommended for full-grain shoe uppers.
Lepton Binder GC	Compact binder with good levelling for finishing corrected-grain cattlehide. This product is distinguished by its good fill and excellent fastness. Can be applied alone or in combination with other binders. Recommended for all types of corrected-grain leather.
Lepton Binder PA	Compact binder with a good filling effect for very elastic finishes with high fastness. Particularly appropriate for finishing corrected-grain leather.
Lepton Binder SPC	Lepton Binder SPC is a binder based on polyurethane and an acrylic polymer. It can be used to formulate finishes with high coverage and excellent flex resistance that give very good results when they are embossed. It is particularly recommended for finishing high-quality splits and corrected-grain cattlehide, such as bag leather or shoe upper leather.

Application performance of compact binders

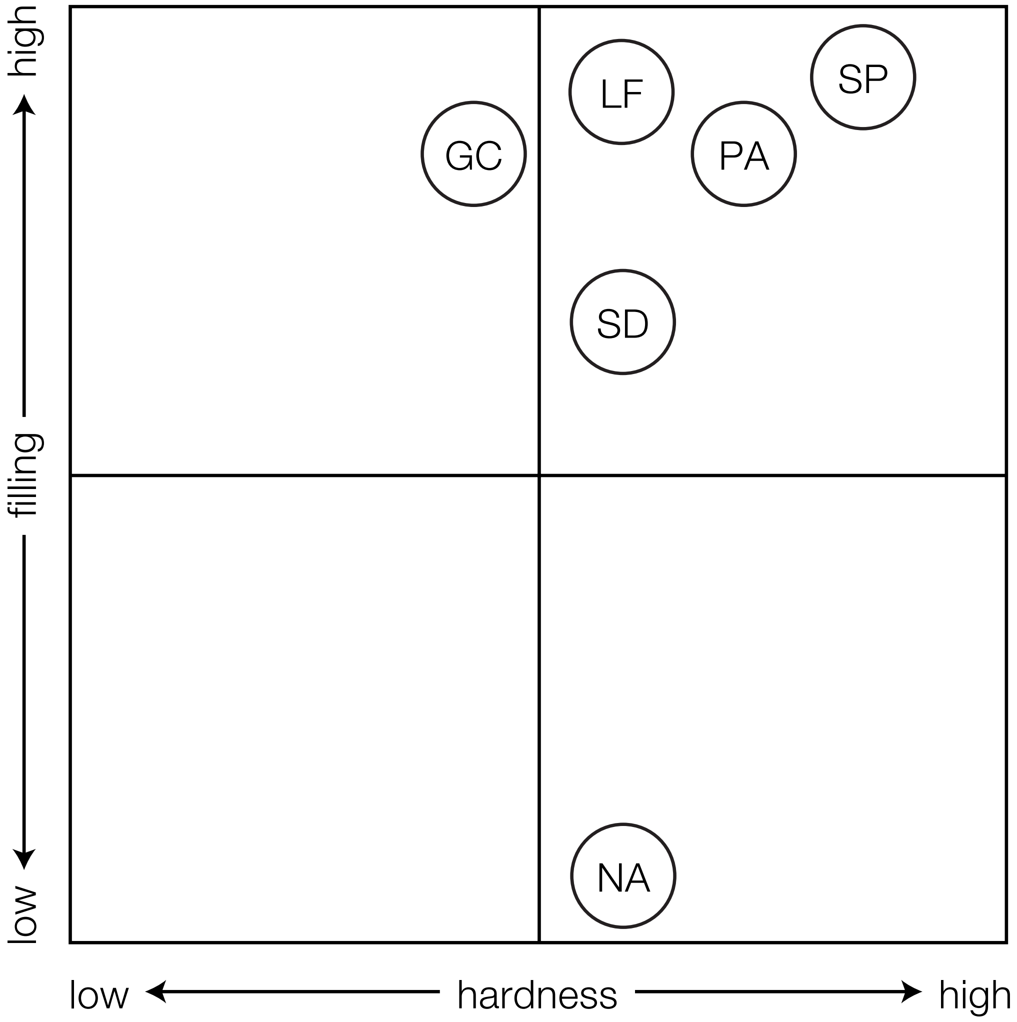

In the following tables the compact binders marked with • are especially recommended to achieve very high levels of the indicated application performance and fastness properties.

Finishing

	Fineness of grain	Fullness	Penetration	Embossability	Low tackiness
Lepton Binder NA	●		●		
Lepton Binder LF		●			
Lepton Binder SD		●		●	
Lepton Binder GC		●			
Lepton Binder PA		●		●	●
Lepton Binder SPC		●		●	●

Fastness performance of compact binders

	Dry flex	Wet flex	Cold flex	Wet rubfastness	Soaking resistance	Lightfastness
Lepton Binder NA	●					●
Lepton Binder LF	●	●		●	●	●
Lepton Binder SD				●	●	●
Lepton Binder GC	●					
Lepton Binder PA	●	●				●
Lepton Binder SPC	●	●	●			●

3. BASF Polyurethane binders (aqueous)

All Astacin Finish types are supplied as aqueous polyurethane dispersions. The suffix "TF” means that the corresponding products are free of alkyl-tin compounds.

Astacin Ground UH TF	Improves the adhesion of finishes applied to oily or water-repellent leathers without impairing their water repellency. Free of organic solvents.
Astacin Finish ARU TF	Finely divided dispersion, free of organic solvents. Forms a soft, flexible film with low tack and a good fill. It does not accentuate defects to any great extent. Especially appropriate for finishing shoe uppers, upholstery leather and garment leather.
Astacin Finish PUD	Gives highly elastic finishes with high fastness. Free of organic solvents.
Astacin Finish SUSI TF	Enables the highest standards of fastness to be attained. It is distinguished by its softness and flexibility. Especially recommended for elegant finishes with a natural break. Free of organic solvents.
Astacin Finish PUM	Soft polyester-polyurethane dispersion. Due to its outstanding film forming properties it is especially recommended for finishes with high fullness. Gives finishes with high cold crack resistance, good embossability and excellent adhesion.
Astacin Finish PUMN TF	Soft polyester-polyurethane dispersion, free of organic solvents. Fills and seals the surface of the leather. Gives finishes with high cold crack resistance, good plating and embossing properties, as well as excellent adhesion.
Astacin Finish PW TF	Dispersion of a soft polyurethane. Forms a tough film with high water resistance and excellent fastness. Especially recommended for box calf-finishes of full-grain shoe uppers and bag leather, and for finishes applied to nappa leather and soft splits.

Astacin Finish PF TF	Forms a tough, dry, non-tacky film. Finishes formulated with this product fulfil the highest standards of fastness, and have a pronounced filling effect. They do not stick and they respond very well to embossing.
Astacin Finish PFM TF	Dispersion of polyurethane and duller. Forms a tough, dry non-tacky film. Finishes formulated with this product fulfil the highest standards of fastness. They do not stick and respond well to embossing.

Application performance of polyurethane binders

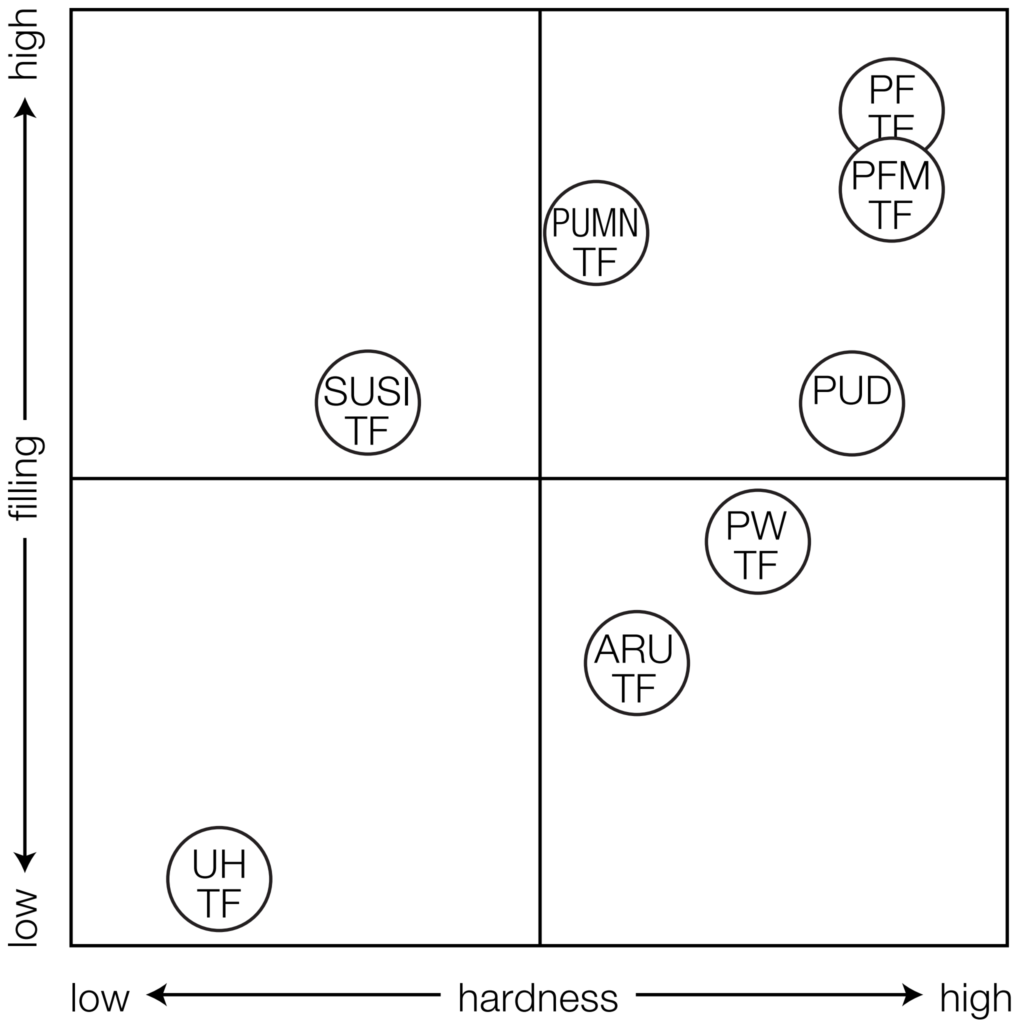

In the following tables the polyurethane binders marked with • are especially recommended to achieve very high levels of the indicated application performance and fastness properties.

	Fineness of grain	Fullness	Penetration	Embossability	Low tackiness
Astacin Ground UH TF	•		•		
Astacin Finish ARU TF	•				•
Astacin Finish PUD		•		•	
Astacin Finish SUSI TF	•	•		•	
Astacin Finish PUM		•		•	
Astacin Finish PUMN TF	•	•		•	•
Astacin Finish PW TF		•		•	•
Astacin Finish PF TF		•		•	•
Astacin Finish PFM TF		•		•	•

Fastness performance of polyurethane binders

	Dry flex	Wet flex	Cold flex	Soaking resistance	Dry adhesion	Lightfastness
Astacin Ground UH TF			•		•	
Astacin Finish ARU TF	•		•		•	
Astacin Finish PUD			•	•		
Astacin Finish SUSI TF	•		•		•	•
Astacin Finish PUM	•	•	•	•	•	•
Astacin Finish PUMN TF	•		•		•	
Astacin Finish PW TF	•	•	•		•	•
Astacin Finish PF TF	•	•	•		•	•
Astacin Finish PFM TF	•	•	•		•	•

4. BASF butadiene binder

Corial Binder BU	Gives non-tacky finishes with an excellent fill and a good response to embossing. Can be applied to splits and as a filler in many different types of finish.

5. Non-thermoplastic BASF binders and top coats (water-dilutable)

Luron Binder U	Thermosetting binder and top coat for plated and glazed finishes. Improves the resistance of finishes to acetone and their resistance to plating at high temperatures.
Luron Lustre E	Elastic, thermosetting binder for glazed finishes.
Luron Lustre TE	Elastic, thermosetting binder for glazed finishes. Reduces the tack of polymer finishes.
Luron Lustre CO	Compact binder for glazed finishes applied to corrected-grain leather.
Luron Matting	Matting agent for thermosetting finishes. Can also be used as a filler for many types of plated finishes.
Luron Top	Tough top coat which responds well to embossing. Especially appropriate for aniline leathers.
Luron Top AC	For glazed, high-gloss finishes.

Top coats and lacquers

1. BASF top coating agents (water-dilutable)

All products with the suffix "TF” are free of alkyl-tin compounds

Astacin Matting MA TF	Aqueous matt top coat based on polyurethane. Dullness is very stable against repolishing. Very flexible at low temperatures. Can also be used in base coats.
Astacin Matting MT	Polyurethane dispersion. Gives a water-resistant, matt finish with a pleasant handle and high cold flex resistance.
Astacin Matting MTB	Polyurethane dispersion. Aqueous matt top coat with high water resistance. For finishes that are required to meet high standards of ageing resistance. Very flexible at low temperatures.
Astacin Top UT	Polyurethane dispersion for use in lightfast top coats with medium gloss, high cold crack resistance and high fastness.
Astacin Top GA TF	Polyurethane dispersion. Forms a soft, flexible film with low tack. Used as the gloss component of aqueous finishes that are expected to fulfil the highest standards of fastness. Can also be employed in base coats.
Astacin Top LH TF	Polyurethane dispersion for aqueous, high-gloss finishes. Can be used for patent leather.
Lepton Matting T	Gives a deep matt finish. Leathers have a pleasant, dry handle and a settled appearance. Mainly used in solvent-free finishes and top coats, but can also be used for emulsion-type finishes that contain solvents.

Lepton Top LB	Easy-to-use gloss top coat for aqueous finishes. This product gives finishes with high mechanical fastness, variable gloss and a smooth, pleasant handle without any crosslinking agents having to be used. However, top coats can be crosslinked with Astacin Hardener CN or Corial Hardener AZ if above-average demands are made on the fastness of the leather.
Lepton Top HT	Novel acrylic top coat. Finishes with a very natural appearance and high fastness can be obtained without any additional crosslinking agents having to be added. However, top coats can be crosslinked with Astacin Hardener CN or Corial Hardener AZ if above-average demands are made on the fastness of the leather. Lepton Top HT can be used in finishes applied to a wide variety of different types of leather, such as shoe upper leather, bag leather, garment leather and upholstery leather.

2. BASF top coating agents: Nitrocellulose emulsions (dilutable with water and/or solvents)

Corial EM Finish G	Nitrocellulose emulsion which can be used as a top coat or as a co-binder for finishes. Gives leathers with a pleasant lustre, a natural handle and high fastness.
Corial EM Finish ES	Nitrocellulose emulsion. Gives a soft, silky handle. Especially appropriate for finishing all types of garment leather.
Corial EM Finish KN	Nitrocellulose emulsion which can be used as a top coat or as a co-binder for finishes in combination with polymer dispersions. Leathers finished with this product have a very high gloss, excellent wet rubfastness and a natural handle.

Corial EM Finish M	Nitrocellulose emulsion. Gives a matt or silky matt finish with high fastness and a smooth handle.

3. BASF gloss and matt lacquers (dilutable only with organic solvents)

Corial Lacquer AW	Soft lacquer. Very high fastness and high gloss.
Corial Matt Lacquer CMR	Amine-resistant top coat for matt leathers with high fastness. Free of nitro groups and resistant to yellowing. The solids contained in this product do not pose any fire hazard. Very appropriate choice for white and pale shades.
Corial Matt Lacquer NW	Gives a silky matt finish with a supple handle.
Corial EM Top SL	Nitrocellulose emulsion with a pronounced filling effect for use in water-resistant top coats with high lustre. Gives a smooth, waxy handle.

BASF finishing auxiliaries

1. Crosslinking agents

Astacin Hardener CN	Highly concentrated isocyanate crosslinking agent for aqueous finishes. Very easy to mix into finishes. Fulfils the highest standards of fastness.
Corial Hardener AZ	Crosslinking agent for polymer binders. Easy to mix into finishes. Fulfils the highest standards of fastness, especially the wet rubfastness.

2. Fillers and waxes

Lepton Filler CEN	Plate-release agent for base coats. Improves levelling and gives leathers with a full, settled appearance and a natural, pleasant handle.
Lepton Filler FCG	Filler and plate-release agent with a matting effect. Gives finishes with a good fill and a smooth, settled appearance. Especially recommended for finishing corrected-grain leather and splits.
Lepton Filler K	Gives finishes with a good fill and a settled appearance on many different types of leather. Improves levelling and imparts thixotropy.
Lepton Filler H	Modified wax emulsion for improving the levelling and fill of finishes. Gives a silky, waxy handle.
Lepton Matting MF	Applied in base coats. Finishes that contain Lepton Matting MF have a good fill, and the leather has a very matt, non-tacky surface. Lepton Matting MF is recommended for all types of full-grain and corrected-grain leather with a pigmented or semi-aniline finish, especially upholstery, automotive and shoe upper leather.

Lepton Wax A	Cationic wax emulsion. Improves the handle and fill of finishes, and prevents leathers sticking when they are plated or piled. Gives a waxy handle.
Lepton Wax B	Nonionic wax emulsion. Improves the handle and gives a smoother, more glossy surface. Excellent plate-release agent. Especially appropriate for use in finishes based on thermoplastic binders.
Lepton Wax 11	Used in base coats and top coats as a plate-release agent and to improve the response of the finish to glazing. Used in base coats to obtain pull-up effects after polishing or plating.
Lepton Wax 16	Plate-release agent for use in base coats and aqueous top coats. Gives a soft, muted handle.
Lepton Wax 20	Plate-release agent for use in base coats and aqueous top coats. Does not impair the wet rubfastness. Used in base coats to obtain a slight pull-up effect after polishing.
Lepton Wax P 60	Concentrated wax emulsion for use in base coats. Gives very high, even coverage, which makes it particularly effective for upgrading fancy leathers, shoe uppers and upholstery leather made from low-quality raw stock.

3. Specialities

Amollan IP	Penetrant for use in combination with impregnating agents for corrected-grain leathers and in finishes applied by spraying.
Amollan E	Defoamer for highly viscous finishes applied by forward roll coating. Gives excellent levelling. Used in combination with Amollan VC.

Amollan VC	High-performance levelling agent for all types of finishes. Particularly appropriate for use in highly viscous finishes applied by forward roll coating. Used in combination with Amollan E.
Amollan Lustre VN	Glazing agent for nubuck and suede. Used to increase the colour strength and brilliance of the shade.
Lepton Filler AF	Foaming agent for foam finishes applied according to the BASF Airfoam System. Stabilizes foam.
Lepton Paste VL	Used to adjust the viscosity of aqueous finishes. Especially appropriate for use in finishes that employ polyurethane binders.
Eukesol Oil SR	Plasticizer for casein-based pigmented coats and binders.
Eukesol Oil Ground	Cationic oil emulsion, capable of being dyed with basic dyes. Compatible with anionic binders. Reduces the absorbency of the leather surface and improves its elasticity.

4. Pull-up oils and waxes

Eukesol Oil 4070	For pronounced pull-up effects.
Eukesol Oil 4080	For pronounced pull-up effects with a waxy handle.
Eukesol Oil SLP	For pronounced pull-up effects with an oily handle.
Eukesol Oil HP	For pull-up effects on water-resistant leathers. Free of organic solvents. Does not impair the water resistance of the leather. Can also be used as a handle modifier for suede.

Eukesol Wax SFB	Solid, solvent-free wax for pronounced pull-up effects. Gives a dry handle and does not impair the water resistance of the leather.
Corial Wax SV	Pull-up wax dissolved in an organic solvent.

5. Handle modifier

Corial Wax S	Handle modifier for solvent-based finishes. Gives a soft, silky handle.
Corial Wax EG	Handle modifier for aqueous and solvent-based finishes. Gives a smooth handle.
Corial Wax EBT	Handle modifier for aqueous and solvent-based finishes. Gives a slightly sticky handle.
Corial Wax G	Makes the surface of the finished leather smoother, silkier and softer. Can also be used to improve the rubfastness in many cases.
Corial Wax H	Water-repellent wax dissolved in organic solvents. For nappalan, nubuck and suede. Can be used in all types of solvent-based finish.
Lepton Wax WA	Used to improve the wet rubfastness of aqueous finishes. Gives better levelling and improves the performance of all types of finish tested by the Taber method. Gives a smooth handle.
Lepton Wax CS	Handle modifier for aqueous finishes. Gives a soft, smooth handle and improves the wet rubfastness.
Corial Wax TA	Used to improve the rubfastness of all types of finish tested by the Taber method.

Solvents and diluents used in finishing

1. Solubilizers for aqueous systems

Product	Abbreviation	Boiling range °C	Flash point °C	Ignition temp. °C	Density at 20/4 °C g/cm^3	Water solubility, 20 °C (g/100 g water)	Risk class VbF
1-Methoxypropanol-2*	PM	119-122	32	270	0.962	÷	A II
Butylglycol (2-Butoxy-ethanol)*	BG	168–172	67	230	0.8995–0.902	÷	A III
Butyldiglycol (2-(2-Butoxyethoxy)-ethanol)*	BDG	228–232	105	210	0.952–0.956	÷	–
Dipropyleneglycol-methyl-ether (tech. Mixture)*	DPM	185-195	80	205	0.957	÷	A III
Propylenecarbonate**	PC	240-243	123	455	1.204	240	–
N-Methylpyrrolidone dist.**	NMP	204	91	245	1.028	÷	A III

* *recommended as substitutes for Ethylglycol*
** *potential substitutes for Dimethylformamide (DMF)*

2. Solvents for lacquers

Product	Abbreviation	Boiling range °C	Flash point °C	Ignition temp. °C	Density at 20/4 °C g/cm^3	Water solubility, 20 °C (g/100 g water)	Risk class VbF
Ethyl acetate (Acetic acid ethylester)		74– 78	–6	460	0.898–0.902	8	A I
iso-Butylacetate (Acetic acid iso-butylester)	i-BuAc	115–118	19.5	425	0.866–0.871	6.1	A II
n-Butylacetate (Acetic acid n-butylester)	n-BuAc	124–128	26.5	415	0.880–0.881	5.9	A II
2-Ethyl-hexylacetate		192–205	77	270	0.870–0.875		A III
Butylglycolacetate		185–188	76	300	0.940		A III

These products can be used instead of Toluene or Xylene as solvents for lacquers.

Although the solvents listed in the tables are less hazardous than previously used solvents, the necessary precautions when handling organic solvents must be observed.

Operating principle of compressed air spraying machine and spraygun

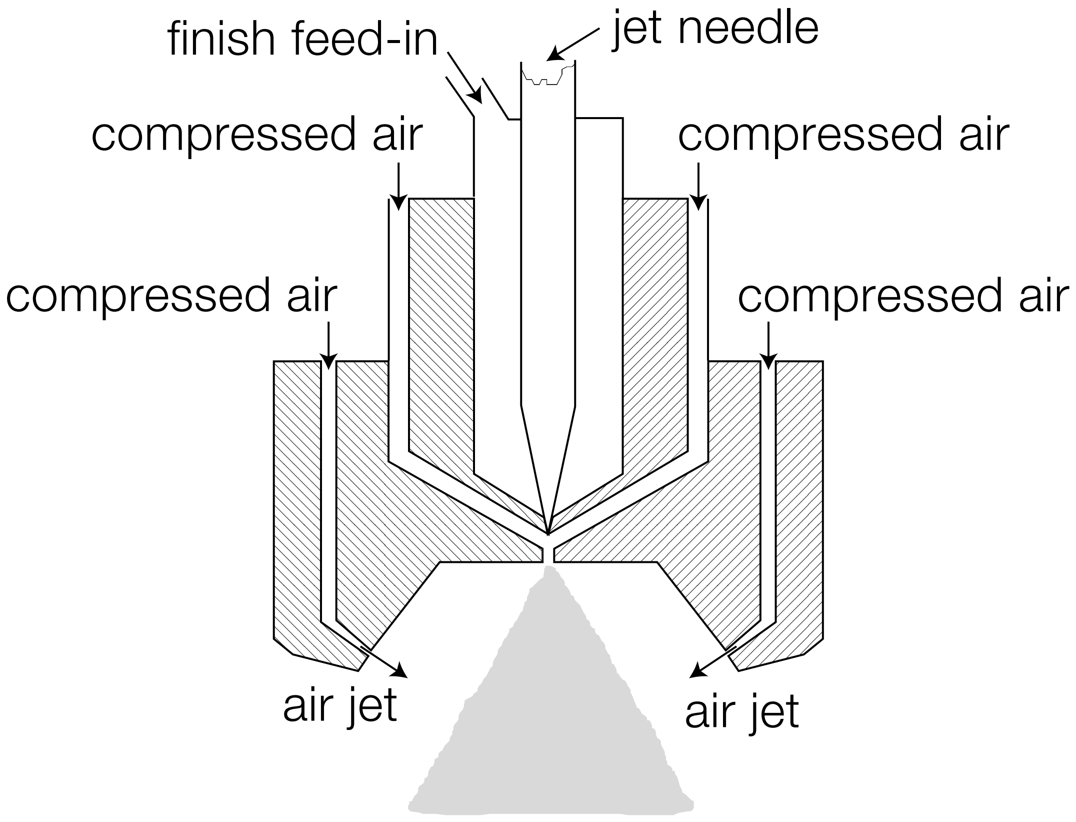

atomised dye solution

Operating principle of curtain coater

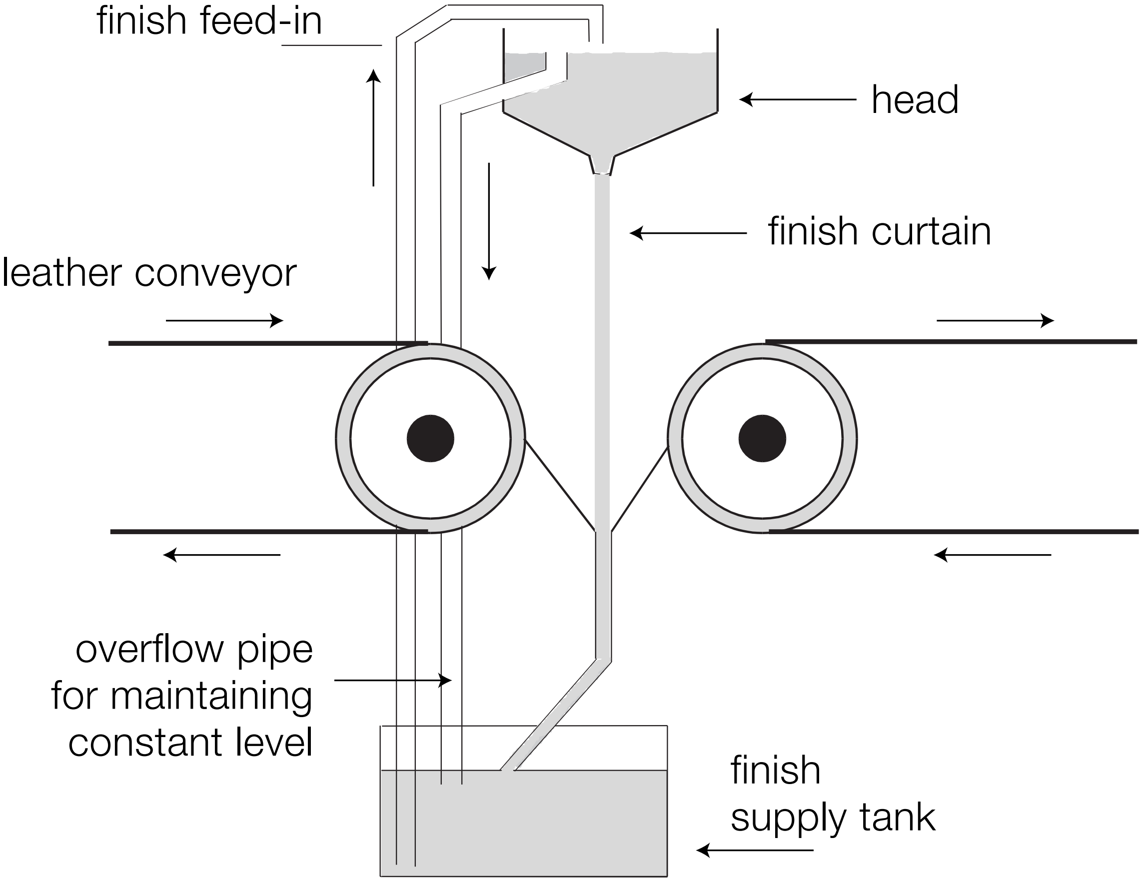

Operating principle of roll coater

a. Direct process

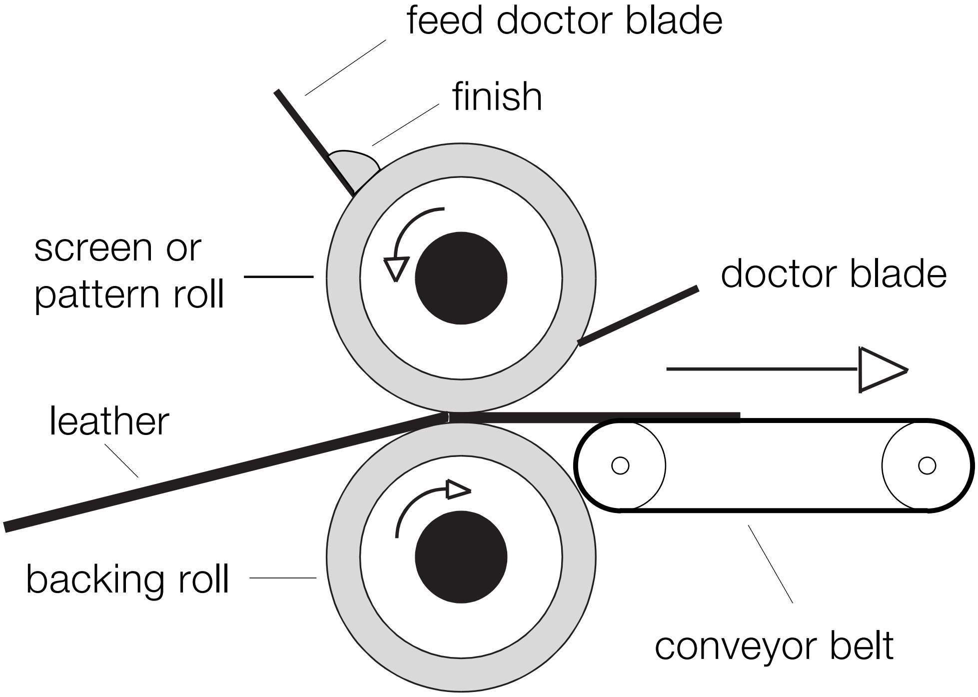

b. Indirect process

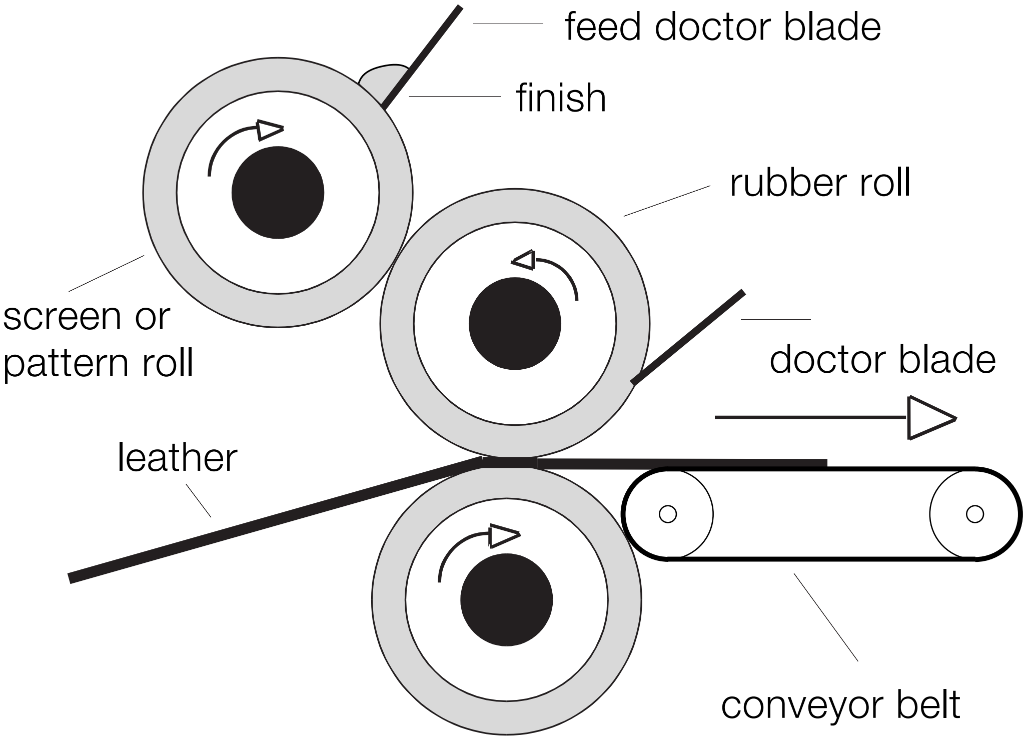

Terms applied to some types of leather

1 ”ASA” leather = chrome tanned cattle hide/splits for protective articles used in industry ("DIN” leather).

2 Bag leather = vegetable/combination tanned leather for bags.

3 ”Blankleder” = vegetable tanned, fairly thick cattle hide leather for belts and seats.

4 Book binding leather = thin, vegetable/synthetic tanned sheep and goat skins.

5 Box calf = chrome tanned, elegant calf skin upper leather.

6 Box side = chrome tanned cattle hide upper leather; soft types = softy box sides.

7 Car upholstery leather = soft cattle hide grain leather with high-grade finish.

8 Chamois = fish oil tanned sheep skin splits; very soft and absorbent.

9 Chevrette = imitation glazed kid; mostly sheep or fairly large goat skins.

10 Clothing leather = thin, soft leathers from cattle hides, sheep and goat skins.

11 Corrected grain leather = chrome tanned cattle hide upper leather with corrected grain surface.

12 Furniture leather = chrome tanned, thin, soft, large area cattle hide.

13 Glazed kid = elegant, fine-grained, chrome tanned goat skin upper leather.

14 Hat band leather = vegetable/synthetic tanned sheep or goat skin leather.

15 Hunting = buffed cattle hide or calf skin suede leather with grain on reverse side.

16 Hydraulic leather = chrome or combination tanned leather for technical purposes.

17 Insole leather = mostly combination tanned cattle hide leather of medium thickness.

18 Lining leather = vegetable combination tanned leather for shoe linings.

19 Morocco leather = vegetable tanned East Indian bastard skins with characteristic boarded grain pattern for bags.

20 Patent leather = upper leather finished with high-gloss polyurethane lacquers.

21 Nappa = generic term for all soft and light leather types.

22 Nubuck leather = tight, buffed cattle hide or calf skin leather with silky feel.

23 Russet leather = vegetable tanned, strongly fatliquored cattle hide or fairly large calf skin upper leather.

24 Russia leather = vegetable tanned cattle hide/calf skin leather treated with birch tar oil.

25 Shrunk leather = cattle hide or sheep and goat skins treated with astringent tanning materials or glutaraldehyde to produce a characteristic grain pattern.

26 Skiver = vegetable or chrome-synthetic tanned thin grain splits of sheep skins for book binding or liming leather.

27 Softy = a term for soft upper leather.

28 Sole leather = vegetable tanned, unsplit cattle hide leather for shoe soles.

29 Suede = leathers of all origins with velvet-like nap produced by abrasive action.

30 Technical leather = leathers from various types of rawstock, specially tanned for transmission belting, gaskets, bellows, etc.

31 ”Vacheleder” = in Germany a type of bottom leather, insole leather.

32 “Vachette” = thin, large, vegetable or combination tanned cattle hide leather for bags.

33 Veal = chrome tanned grasser skin upper leather similar to boxcalf.

34 Waterproof leather = water-resistant chrome or combination tanned leather, fairly thick cattle hide upper leather.

35 “Wildleder” = often used as an incorrect term for suede or velvet leather.

Leather goods

Leather is used in the production of a variety of different articles, for shoes, garments, upholstery and, increasingly, in the automotive sector. Leather is a very versatile material, and the various different applications in which it is used make very varied demands on its performance.

More than 90 % of all the leather that is produced is used in the manufacture of the following products.

- Shoes
- Automotive upholstery and trim
- Upholstery for furniture
- Clothing

The processes employed in the beamhouse mainly depend on the type of raw stock that is treated, but the choice of tannage and retannage is largely governed by the application for which the leather is intended. This also applies to the subsequent stages in the process, from dyeing and fatliquoring through to finishing, which determine the individual character and specific properties of the leather.

We at BASF supply a high-performance range of products for all stages of the process from the beamhouse through to finishing. Information is available on the Internet at **www.basf.com/leather**.

Shoe leather

Of all the leather produced world-wide, shoe upper leather accounts for by far the largest proportion. Other types of leather such as linings, sole leather and insole leather are also used in the production of footwear. Yet upper leather alone is produced in very many different varieties, ranging from lightweight, fashionable shoe uppers through to hard-wearing, breathable uppers for sport shoes and heavy, water-resistant leather uppers for hiking boots or industrial footwear.

Types of leather

Full-grain, aniline
Full-grain, semi-aniline
Full-grain, pigmented
Soft nappa
Water-resistant leather
Pull-up leather
Nubuck
Box calf
Corrected-grain cattlehide
Suede
Splits
Sport shoe leather
Leather for industrial and safety shoes
Fancy leathers
Vegetable-tanned leather

In spite of all this diversity, there are a number of general principles that apply to all kinds of shoe upper leather.

Raw stock	Mainly cattlehide, but also sheepskin and goatskin, etc.
Beamhouse	It is important for hides and skins to be opened up well.
Tannages	• Chrome tannages • Wet white tannages are increasingly being used for children's shoes and sport shoes. • Vegetable tannages
Retannages	For a tight grain and reasonably firm leather: • Vegetable tanning agents and syntans with a good filling action. • Resin tanning agents and dispersing agents for uniform fullness, and for enhancing the nap of nubuck and suede. • Polymers for enhancing the fullness of leather and tightness of the grain, improving the levelling of the dyeing process and hiding defects in the grain. • Aldehydes for improving the perspiration resistance, especially of uppers for unlined shoes.
Dyeing	Predominately brown and black shades It is usually sufficient for dyes to have moderately high lightfastness and heat resistance, because a fairly heavy finish is applied to the leather. Stringent demands are made on the migration resistance and perspiration resistance of dyes.

Fatliquoring	Different types and quantities of fatliquor are applied depending on the type of leather. The aim is to obtain a tight grain, high tensile strength and high tear propagation resistance.
Water repellents	Many types of shoe upper leather are increasingly expected to have enhanced water resistance, and modern water repellents allow these demands to be met without impairing the breathability of the leather.
Finishing	• Attractive visual appearance (fashionable, elegant shades) • High flexibility • High water resistance • High resistance to staining by water droplets • High permeability to water vapour

Automotive leather

Elegant leather seats are no longer exclusively found in luxury vehicles. Buyers of mid-range vehicles are increasingly choosing a leather interior trim. High-quality leather has a reputation for exclusivity, long life and serviceability, and it is easy to maintain. Leather is used for dashboards, door panels, steering-wheel covers and gear lever handles as well as for seat covers and head rests.

The interior temperature inside vehicles can vary within extremely wide limits, and the leather has to be able to withstand intense sunlight and substantial wear and tear. Manufacturers of high-quality automotive leather have to have a high level of expertise at all stages from the selection of raw stock through to finishing. The art of finishing plays a more important role here than in the production of any other type of leather.

Attention needs to be paid to the following in the production of automotive leather.

Raw stock	High or very high quality cattlehide, preferably with no grain defects, but exotic skins such as water buffalo or ostrich can also be used.
Beamhouse	The skin has to be opened up well and evenly during liming.
Tannage	• Chrome tannage • The popularity of wet white is increasing due to less shrinkage, which is important for dashboards and door panels.
Retannage/ Dyeing	Attention needs to be paid to the following when selecting products: • High tensile strength and tear resistance • High lightfastness and heat resistance • High resistance to migration • High perspiration resistance • Fine, even break after milling • Selective increase in fullness in the loose areas of leather • Level dyeing • High hiding power for grain defects • Low formaldehyde content and limited VOC/FOG values The most important shades are black, grey and beige.
Fatliquoring	Low-fogging products such as polymeric fatliquors with • Neutral odour • High resistance to high temperatures • High tensile strength and tear resistance • Low-VOC Fatliquors should be selected which give soft but not stretchy leather.

Finishing	• High hiding power for grain defects, without impairing the permeability to water vapour and handle. • Exact shades – metamerism (computerized colour matching) • Low-VOC finishes • Low formaldehyde content • High wear resistance • High resistance to ageing

If wet white and chrome-tanned leather are compared, it can be seen that the advantages and disadvantages of these two processes mirror each other.

	Advantages
Wet white leather	• Low shrinkage under hot, dry conditions • Easier to recycle and dispose off, free of heavy metals
Chrome-tanned leather	• Low fogging, low VOC content, high migration resistance

Upholstery leather

Unlike automotive upholstery leather, upholstery leather for furniture is not subjected to extreme variations in climate. Nevertheless, it still needs to fulfil similar standards of lightfastness as automotive leather, because it tends to be exposed to strong sunlight at irregular intervals. Upholstery leather also has to be hard-wearing and easy to maintain, and it is required to have a warm, soft handle.

Corrected-grain leather such as nubuck and suede can be used for upholstery as well as smooth, full-grain leather.

Attention needs to be paid to the following in the production of upholstery leather.

Raw stock	Cattlehide or water buffalo of high or very high quality, preferably with no grain defects.
Beamhouse	• The hide has to be opened up well during liming.
Tannages	• Chrome tannage • Vegetable tannage • Wet white tannage
Retannage/ Dyeing	Attention needs to be paid to the following when selecting products: • High lightfastness and heat resistance • High tensile strength and tear resistance • High perspiration resistance • Selective increase in fullness in the loose areas of hide • Even break after milling • Level shades • High hiding power for grain defects Leather can be dyed to all colours, from classical shades to very intense, brilliant shades.
Fatliquoring	• Neutral odour • High tensile strength and tear resistance • High lightfastness and heat resistance • Specific types of handle are required • Uniform softness
Finishing	• High hiding power for grain defects, without impairing handle, visual appearance and permeability to water vapour. • Resistant to cleaning • Hard wearing

Garment leather

A wide selection of raw stock with large differences in the structure of the skin and hide, fat content, etc., are used for garment leather. This diversity implies that processes have to be adapted to the particular type of raw hide in order to gain the best results. The methods employed in the processing of garment leather are much more varied than those used in the manufacture of other types of leather. Goatskin and pigskin are mainly used for suede garment because of the structure of the skin, but most sheepskin is full-grain.

Garment leather has to be soft and lightweight, with a pleasant handle and reasonably weatherproof.

The following principles need to be observed in the production of garment leather.

Raw stock	Cattlehide, calfskin, sheepskin, pigskin, goatskin and skins of various game animals such as deerskin.
Beamhouse	• The skin has to be opened up well during liming. • Greasy skins need to be degreased well.
Tannage	Chrome tanning is more appropriate than other tanning methods due to the required softness of the leather. For that reason combinations with chrome and glutaraldehyde can also be found quite often.
Retannage	Attention needs to be paid to the following factors when selecting syntans and polymers: • High lightfastness • Neutral odour
Dyeing	Leather can be dyed to all colours, from classical shades to very intense, brilliant shades. • High lightfastness • High migration resistance and perspiration resistance

Fatliquoring / water repellents	• Neutral odour • Extremely soft leather • High bulk • Pleasant handle • High water resistance and perspiration resistance • Water-resistant treatment may be applied
Finishing	• Leathers range from being left unfinished to being given a fairly thick coat of finish. • Stretchy leather • Pleasant handle and optical appearance

A selection of specifications for different types of leather can be found in the chapter entitled “Test methods”.

Fur

The fur industry is closely related to the leather industry. The main difference is that the fur dresser or dyer must see to it that the hair remains firmly anchored in the leather, and all his processing operations are carried out in such a manner that the hair is not damaged in any way.

The main processes in the production of fur are divided in:

• **Fur dressing**	covers all operations necessary to convert the putrefactive raw skin into a durable material, from soaking up to tanning and fatliquoring.
• **Fur dyeing**	includes all operations that are modifying or improving the appearance of the hair and leather.
• **Nappalan**	= flesh side finish. Finishing operations to improve look and serviceability of the flesh side.

For the production of fur, the skins of more than 100 different types of animals are used. According to the economical significance it is customary in the fur trade to divide furs into two groups:

- Furs derived from lamb, sheep and goat.
- All other furs.

Fur skin, general

Morphologically, there is no difference between skins and furs of animals that are processed to leather and those that are used for fur skins. A characteristic feature of many types of fur skins is, however, the great extension and thickness of the hair follicles. The hair of the many different types of fur skins varies widely in its form and structure, and it is specific to the species.

There are three different types of hair:

• **Guard-hair**	long, coarse, smooth, straight, relatively few in number
• **Top-hair**	somewhat shorter than the guard-hair; straight, thickened below the hair tip
• **Under-hair, under-wool or fur-hair**	fine, usually crimped; far more numerous than the other types of hair; lamb and sheepskins have this type of hair only.

Fur

Hair consists of the protein keratin. Like the protein of the skin, collagen, it is based on amino acids. In contrast to collagen, however, keratin contains no hydroxyproline, but sulfur-containing amino acids, which cross-link the polypeptide chains of the keratin and impart stability. Furthermore the proportion of acid amino acids contained is far larger in keratin than in collagen. For this reason, the isoelectric point (I.P.), which is important for dyeing, lies at different pH values for the two fibre proteins (untreated collagen I.P. approx. 7, keratin I.P. approx. 5.5). Apart from this the I.P. of collagen is shifted by a tannage, while the I.P. of keratin remains practically unchanged, except when a treatment with aldehydes is carried out. These differences in the chemical composition and morphology of hair and skin are the reason for the varying behaviour of the two proteins and make the dyeing of fur skins an art that requires much skill and experience.

Fur dressing

It is customary to process fur skins in paddles in long aqueous floats. Especially for lamb and sheepskins short-liquor systems in drums were developed for economical and ecological reasons.

In all wet processing operations the term "liquor ratio" means the relationship between the volume of the liquor and the mass of fur. The amount of chemicals used is usually indicated in grams or millilitres of substance per litre of liquor (g/l or ml/l), or in some cases in percentage of the fur weight.

BASF products for fur dressing

1. Soaking

Bascal S	Mixture of aliphatic dicarboxylic acids; for acidic post-soaking. It notably facilitates de-fleshing, also on very dry raw merchandise.
Cortymol BAC	Bactericide based on an aqueous solution of N-dimethyl-dithio-carbamate, in order to avoid damage caused by bacteria.
Eusapon S	Ethoxylated synthetic alcohol, nonionic. Good wetting properties, dissolves impurities and emulsifies greases.

Eusapon W	Mixture of organic products, notably accelerates soaking, aids the penetration of water and loosens the fibre structure.

2. Washing

Eusapon LPK-E	Alkylsulfates and alkyl-ether-sulfates. Product generally applicable for washing all types of raw or finished skins for leather, with or without added soda.
Eusapon P	Sulfated fatty alcohols, for washing wool, especially for dirty raw hides with fat; good biodegradability.

3. Bleaching

Blankit IN, **Blankit AN**	Special stabilised whiteners based on sodium dithionite. Blankit AN contains an optical brightening agent and is used for lightening natural white wool, improving the white effect, as well as for removing dyes.

4. Pickle

Concentrated formic acid	Provides especially soft and stretchy hides together with Bascal S.
Bascal S	Pickling acid with buffering and masking effect, hydroreactant. Also especially adequate for thin hides or those with a sensitive grain. In conjunction with other organic acids, mainly formic acid, it provides particularly soft and extendable hides.

5. Bating

Basozym 1000	Preparation based on bacterial enzymes, used for loosening the skin’s structure.

Basozym CS 10	Enzymatic preparation based on organic enzymes, used in acidic medium in order to loosen the skin’s structure. Improves extensibility and softness, while compensating the differences between the different previous treatments.

6. Tanning and retanning

Basyntan D liquid	Synthetic replacement tanning agent based on a condensation product of aromatic sulfonic acids meant to increase plenitude while conserving the hide’s softness. It is characterized by its excellent dyeability.
Basyntan DLE	White tanning agent and retanning agent based on a condensation product of aromatic sulfonic acids. Very good plenitude effect, good softness and light fastness, excellent dyeability.
Basyntan E	Chrome/aluminium syntan used as a retanning agent, excellent buffing and dyeing properties.
Basyntan FC	Acid tanning auxiliary. Reduces the risk of dying the suede when the wool is dyed. Used in mordanting with dichromate for black dying with Ursol dyes and a violet-blue colour is obtained on the leather side.
Chromitan B	Alkaline chrome sulfate, approx. 25 % Cr_2O_3, basicity 33 – 35 %.
Chromitan FM	Chrome sulfate with light masking effect. Approx. 24 % Cr_2O_3, basicity 40 %.
Implenal AP, Implenal DC liquid	Complexing agents based on organic dicarboxylic acids. Improve plenitude, especially for lamb- and sheep skins.
Lutan BN	Very basic aluminium complex salt with a high fixing power. Provides more plenitude and better buffing properties, making it especially apt for suede. Approximately 16 % Al_2O_3, basicity approximately 50 %.
Lutan CRN	Aluminium and chrome complex; approximately 14.5 % Al_2O_3, approximately 3.5 % Cr_2O_3, basicity approximately 20 %. For tanning furskin with a light coloured flesh side, does not make the wool green.

Lutan FN	Basic salt from an aluminium complex, approximately 17 % Al_2O_3, basicity approximately 20 %. For white finishing of all types of furskin; provides good softness and extensibility.
Neutrigan	Neutral reacting buffering mixture of organic and inorganic complexing agents for soft de-acidification of furskins that have been tanned with mineral tanning agents.
Relugan GT 50/ Relugan GT 24	50 or 24 % glutaraldehyde solution. Used alone or in combination tannages of very soft furskins. Provide tanning that stands up well to washing (for instance, for lambskin used in hospitals); they dye wool and leather slightly yellow.
Relugan GX	Aliphatic aldehyde in an aqueous solution, with very little odour. Adequate for furskins with white wool.
Relugan RF	Polymeric anionic tanning agent. Not acid sensitive. Combinable with chrome tanning in order to improve plenitude. Excellent fastness with respect to light and heat.
Tamol NA	Synthetic neutralization agent with excellent buffering effect, for dyeing scarcely lightened furskin suede with uniform shine using Luganil/Lurazol dyes.

7. Fatliquoring/water repellent treatment

Lipoderm Liquor A1	Anionic fatliquoring agent based on ester sulfite. Very good stability with respect to chrome and electrolytes. Provides very soft and flexible furskins.
Lipoderm Liquor LA	Anionic fatliquor based on lecithin for controlling feel properties.
Lipoderm Liquor PN	Anionic sulfite fatliquoring agent with a natural base, does not yellow and stands up well to light. Good resistance to salts, acids, and mineral tanning agents. For all types of furskins and finishes.
Lipoderm Liquor PSE	Combination of synthetic fatliquoring agents with special emulsifiers. Anionic, good resistance to electrolytes, elevated fixing capacity, low extractability with organic solvents.

Lipoderm Liquor WF	Natural sulfite oil with a lanolin base. Improves feel and increases shine in furskin suede, together with Lipoderm Liquor PSE.
Lipamin Liquor SO,	Cationic fatliquors with synthetic or natural base and good resistance to the electrolytes in the tanning bath.
Lipamin Liquor NO	Adequate for regreasing dyed leather.
Immergan A	Oil tanning agent with an aliphatic sulfo-chloride base, which provides good softness and resistance to alkalis, as well as excellent fastness with respect to light. Improves grease distribution and fixing.
Densodrin EN	Water repellent that stands up well to light, with fat content.
Densodrin OF	Aqueous emulsion of special polysiloxanes. Used as a top greasing agent for furskin suede; notably improves shine and feel.
Densodrin SI	Aqueous emulsion of special polysiloxanes. When applied by itself it provides extremely light and soft furskins. Improves shine and feel.

Fur dyeing

Many types of fur skins, particularly the more valuable furs, are further processed in the undyed state. Yet the proportion of fur skins that are dyed has increased markedly in recent years due to the increasing demand for sheep skin articles for decorations, automotive seat covers and clothing purposes. Cheaper kinds of fur, such as lamb, sheep, kid and rabbit can be made to look like valuable furs, e.g. seal, beaver or chinchilla by means of a dyeing process and mechanical treatment. These cheaper furs are also printed to produce imitations of leopard, ocelot and lynx. Special effects can be achieved by just dyeing the tips of the hair.

BASF products for fur dyeing

1. Ursol Dyes

Oxidation colours based on oxyamines and diamines, used after mordanting for dyeing all types of furskins. Good or very good lightfastness of full shades, less pale shades.

Ursol EG	Developing dye with a weak dyeing power, improves fastness with respect to dyeing.
Ursol ER	Developer for blue and red wine shades.
Ursol D	Important starting dye for grey-brown and black tones of all shades.
Ursol NZ	For covered grey-brown tones.
Ursol P Base	Lively grey-brown colouring with reddish shade.
Ursol 3GA	Dye for shading in large quantities with a light yellowish shade.
Ursol Grey BC	For grey tones, together with Ursol NZ also for grey-brown shades, as well as together with Ursol Fast Black for black shades.
Ursol Fast Black	For black dyeing with a bluish shade; lightfast and fast to ironing.

2. Eukesolar Dyes

Metal complex dyes that provide shades on lambskins and sheepskins, with excellent fastness with respect to light and ironing. A carrier is required for dark and medium tones.

Eukesolar Yellow GL

Eukesolar Orange RL

Eukesolar Red GL

Eukesolar Black RL

3. Lurazol Fur E Dyes

Anionic dyes especially selected for dyeing fur skins because of the following properties:
- good exhaustion at 60 – 65 °C
- good combinability at this temperature
- only light staining of the leather
- similar fastness properties.

Lurazol Fur Lemon E

Lurazol Fur Yellow E

Lurazol Fur Blue E

Lurazol Fur Red E

Lurazol Fur Orange E

Lurazol Fur Black E

By combining these dyes a wide variety of shades can be obtained.

4. Lurazol Fur D Dyes

Special selected dyestuff-dispersions for dyeing the wool of fur with the following properties:
- can be removed from the hair tips with Decrolin or Rongalit C = snow top effect
- excellent dye uptake even at low temperature (45 °C)
- brilliant shades
- good mixing capability

Lurazol Fur Yellow D

Lurazol Fur Orange D

Lurazol Fur Blue D

Lurazol Fur Black D

Lurazol Fur Brown D

Lurazol Fur Green D

Lurazol Fur Red D

5. Luganil/Lurazol Dyes

These dyestuffs are used for dyeing the leather side of hides used for furskin suede. For a description of these dyes see chapter “drum dyeing”.

Generally all Luganil and Lurazol dyes can be used for this purpose. The following is a list of dyes that do not colour the wool in the dyeing bath, or do so only slightly.

Luganil Yellow G
Luganil Orange GGC
Luganil Orange NR
Luganil Light Brown NG
Luganil Brown GOL
Luganil Brown NGB
Luganil Brown MFR
Luganil Brown NGT
Luganil Olive Brown N
Luganil Brown RL
Luganil Brown NT
Luganil Brown NR
Luganil Red Brown NB
Luganil Red NG
Luganil Bordo B
Luganil Blue NGR
Luganil Blue N
Luganil Dark Blue NB
Luganil Dark Green N
Luganil Grey GC
Luganil Black CN
Luganil Black NT

Lurazol Beige L
Lurazol Brown MGR
Lurazol Brown P
Lurazol Red BN
Lurazol Brilliant Blue SBN
Lurazol Green EG
Lurazol Black MST

6. Dyeing auxiliaries

Amollan Lustre VN	Special oil-mixture to improve the tone in dyeing and equality as well as the brilliance of suede
Bastamol DRN	Cationic fixing agent for improving fastness with respect to washing and perspiration.
Densotan A	Polymeric auxiliary with dispersing properties and excellent lightfastness and heat resistance.
Eusapon A concentrate	Nonionic ethoxylation product with a weak residual cationic charge. Versatile surfactant with good levelling properties, especially for dyeing with Lurazol Fur E Dyes.
Lutensol ON 30	Nonionic ethoxlated fatty alcohol; carrier that greatly intensifies the tone in dyeings with Eukesolar dyes. The leather side is dyed with less intensity.
Lipoderm N	Mixture of surfactants with a greasing and colour equalising effect, improves furskin suede through-dyeing.
Siligen MSI	Primary emulsion of a polysiloxane for improving shine during ironing.
Tamol GA	Anionic levelling agent that stands up well to light, for dyeing furskin suede to medium to dark shades using Luganil/Lurazol dyes.
Tamol M	Mixture of neutral salts from aromatic sulfonic acids. Lightens the leather side in dyeings with Lurazol Fur E dyes.
Tamol NNOL	Anionic levelling agent for light furskin suede dyeing of lambskin and suckling lambskin using Luganil/Lurazol dyes. Solid with respect to light.
Tamol R	Auxiliary for through-dyeing, with a slightly cationic charge.

Nappalan – flesh side finishing

Flesh side finishing improves appearance, handle and serviceability of the leather side of fur.

All finishing products of the BASF range may be used.

Leather testing methods

Please take into consideration that testmethods and specifications are under continuous revision. A list of addresses at the end of this chapter provides information where the up to date versions of the official test methods are available. Further more many leather manufacturers have developed their own test methods and specifications.

IUC/IUP-methods

The official methods of the International Leather Chemists' Societies for chemical leather analysis are denoted by the letters **IUC** and that for the physical testing of leather by the letters **IUP**. Most of them have been adopted as official methods.

The letters **DIN** denote the official leather test methods of the German Standard Committee. Most of them have been drawn up in conformance with the IUC and IUP methods.

Methods of chemical leather analysis

IUC/1	General remarks and presentation of analytical results = factually corresponding with DIN 53300/part 2
IUC/2	Sampling (as in IUP/2) = factually corresponding with DIN 53302/part 2
IUC/3	Preparing the test material by disintegration = factually corresponding with DIN EN ISO 4044
IUC/4	Determination of substances extractable with dichloromethane = factually corresponding with DIN EN ISO 4048
IUC/5	Determination of the water content of leather = factually corresponding with DIN 53304
IUC/6	Determination of organic and inorganic substances in leather removable by washing (loss by washing) = factually corresponding with DIN 53307
IUC/7	Determination of ash and water-insoluble mineral substances = factually corresponding with DIN EN ISO 4047

IUC/8	Determination of chromium content = factually corresponding with DIN 53309
IUC/9	Determination of water soluble magnesium salts in leather (epsom salt) = factually corresponding with DIN EN ISO 5399
IUC/10	Determination of nitrogen, ammonium and skin substance = factually corresponding with DIN 53308
IUC/11	Determination of pH and difference value of aqueous leather extract = factually corresponding with DIN EN ISO 4045
IUC/13	Determination of zirconium = no corresponding DIN test method available
IUC/15	Determination of phosphorus = no corresponding DIN test method available
IUC/16	Determination of aluminium = no corresponding DIN test method available
IUC/17	Determination of hydroxyproline = no corresponding DIN test method available

DIN standards not within the IUC range

DIN 53314	Determination of chromium (VI) compounds in leather
DIN 53315	Determination of formaldehyde in leather

The following methods are in the course of preparation and have not yet been adopted as official methods:

a. Determination of iron in leather

b. Determination of free fatty acids in leather

d. Determination of extractable fat (chamois leather)

e. Determination of sulfur in leather

f. Determination of glutaraldehyde in leather

g. Determination of pentachlorophenol (PCP) in leather

Methods of physical leather testing

IUP /1	General remarks
IUP/2	Sampling = factually corresponding with DIN 53302/part 1
IUP/3	Conditioning in standard atmosphere (65 ± 2 % RH and 20 ± 2 °C; DIN 50 % RH, 23 ± 2 °C) = factually corresponding with DIN 50014-2
IUP/4	Measurement of thickness = factually corresponding with DIN 53326
IUP/5	Measurement of density = factually corresponding with DIN 53327
IUP/6	Measurement of tensile strength, elongation at break and maximum force = factually corresponding with DIN 53328
IUP/7	Measurement of absorption of water (Kubelka) = factually corresponding with DIN 53330
IUP/8	Measurement of tearing load = factually corresponding with DIN 53329
IUP/9	Measurement of distension and strength of grain by the ball burst test (Lastometer) = factually corresponding with DIN 53325
IUP/10	Dynamic waterproofness test (Penetrometer) = factually corresponding with DIN 53338/part 1
IUP/11	Dynamic waterproofness test for boot and shoe sole leather = factually corresponding with DIN 53338/part 2
IUP/12	Measurement of resistance to grain cracking = factually corresponding with DIN 53324

IUP/13	Measurement of two-dimensional extension (Tensometer) = factually corresponding with DIN 53323
IUP/14	Measurement of the waterproofness of gloving leathers = no corresponding DIN test method available
IUP/15	Measurement of water vapour permeability = factually corresponding with DIN 53333
IUP/16	Measurement of shrinkage temperature = factually corresponding with DIN 53336
IUP/17	Measurement of resistance of air-dried insole leather to heat, particularly during direct vulcanization = no corresponding DIN test method available
IUP/18	Determination of the resistance of air-dried lining leather to heat, particularly during direct vulcanization = no corresponding DIN test method available
IUP/19	Determination of the resistance of dry upper leather to heat, particularly in direct vulcanization and in moulding on soles during shoe production = no corresponding DIN test method available
IUP/20	Determination of the flexing endurance of light leathers and their surface finishes (dry and wet) in flexometer = factually corresponding with DIN 53351
IUP/21	Measurement of set in lasting with the dome plasticity apparatus (Plastometer) = no corresponding DIN test method available
IUP/22	The assessment of surface damage by use of the viewing box = no corresponding DIN test method available
IUP/23	Measurement of damage caused by scuff = no corresponding DIN test method available
IUP/24	Measurement of surface shrinkage by immersion in hot water
IUP/26	Measurement of abrasion resistance of sole leather
IUP/28	Measurement of resistance to bending of heavy leather

IUP/29	Determination of cold crack resistance of finishes = factually corresponding with DIN EN ISO 13333
IUP/30	Determination of water vapour absorption and desorption in relation to dimensional changes in the leather
IUP/32	Measurement of surface area (provisional draft) = factually corresponding with ISO 11646

DIN standards not within the IUP range:

DIN 53331	Determination of stitch tear strength.
DIN 53332	Determination of water vapour absorption.
DIN 53340	Determination of flexing endurance of low flexibility leathers.
DIN 53344	Determination of resistance for hydrolysis of finished and unfinished leathers.
DIN 75200	Determination of fire resistance.
DIN 75201	Determination of fogging characteristics of trim materials in motor vehicles. Method A: determination with 60° reflectometer. Method B: gravimetric determination.
DIN 75202	Determination of light fastness of trim materials in motor vehicles using the Xenon arc light.
DIN EN 344-1	Protective shoes.
DIN EN 374-1	Protective gloves.
DIN EN ISO 105B-02	Colour fastness to artificial light.

IUF methods see chapter “Testing of leather dyes and leather dyeings”

ALCA analytical methods compared to ASTM methods (1991)

ALCA = American Leather Chemists Association
ASTM = American Society for Testing and Materials

ALCA No.	Methods	ASTM No.
A 1	Analysis of Vegetable Tanning Materials – General	D 4899
A 10	Preparations of Solution of Liquid Extracts	D 4901
A 11	Prep. of Solution of Solid, Pasty and Powdered Extracts	D 4905
A 12	Cooling of Analytical Solutions	D 4905
A 13	Evaporation and Drying of Analytical Solutions	D 4902
A 20	Total Solids and Water	D 4903
A 50	Lignosulfonates (Sulfite Cellulose)	D 4900
B 2	Preparation of Sample for Analysis	D 2813
B 3	Moisture	D 3790
B 4	Solvent Extract	D 3495
B 5	Nitrogen Content and Hide Substance (Kjeldahl)	D 2868
B 8	Water Soluble Material	D 2876
B 11	Insoluble Ash	D 2875
B 15	Total Ash	D 2617
B 20	pH of Leather	D 2810
C 1	Chromium in Chrome Tanning Liquors	D 3898
C 5	Acidity of Chrome Tanning Liquors	D 3813
C 10	Basicity of Chrome Liquors	D 3897
D 1	Preparations of Samples for Chemical Tests	D 2813
D 10	Standard test method for determination of chromic oxide in wet-blue (perchloric acid oxidation)	D 6656
D 20	Sulfates (Total, Neutral and Combined Acid)	D 4655
D 21	Chlorides	D 4653
D 30	Sulfate Basicity	D 4654
D 35	Acidity (pH value)	D 2810
E 1	Conditioning Leather for Physical Testing	D 1610
E 2	Area	D 2346
E 3	Thickness of Units	D 1814
E 4	Thickness of Specimens	D 1813
E 5	Width	D 1516
E 10	Tongue Tear Strength	D 4704
E 11	Buckle Tear Strength	D 4831
E 12	Stitch Tear Strength, Single Hole	D 4786

ALCA No.	Methods	ASTM No.
E 13	Stitch Tear Strength, Double Hole	D 4705
E 14	Bursting Strength, BAN	D 2207
E 15	Tensile Strength	D 2209
E 16	Breaking Strength	D 2208
E 17	Elongation	D 2211
E 30	Water Absorption (Static)	D 1815
E 32	Permeability to Water Vapour	D 5052
E 42	Resistance to Cracking at Low Temperature	D 1912
E 45	Compressibility of Leather	D 2213
E 46	Crocking	D 5053
E 52	Corrosion Produced by Leather in Contact with Metal	D 1611
E 53	Colourfastness/Transfer of Color in the Washing of Leather	D 2096
E 54	Flex Testing of Finish on Upholstery Leather	D 2097
E 55	Dynamic Water Resistance of Shoe Upper Leather by Dow Corning Leather Tester	D 2098
E 56	Dynamic Water Resistance of Shoe Upper Leather by the Maeser Water Penetration Tester	D 2099
E 57	Resistance to Wetting of Garment Type Leather (Spray Test)	D 1913
E 58	Grain Crack and Extension of Leather by the Mullen Test	D 2210
E 59	Slit Tear Resistance of Leather	D 2212
E 60	Thermal Conductivity of Leather with the Cenco-Fitch-App.	D 2214
E 61	Resistance of Chrome-Tanned White Shoe Upper Leather to Artificial Perspiration	D 2322
E 62	Apparent Density of Leather	D 2346
E 63	Relative Stiffness of Leather by Means of Torsional Wire Apparatus	D 2214
E 64	Break Pattern of Leather (Break Scale) Oils, Greases and their Products	D 2941
H 5	Sulfonated and Sulfated Oils – General	D 500
H 40	Moisture	D 500
H 41	Moisture & Volatile Matter	D 500
H 42	Organically Comb. Sulfuric Anhydride Titration Test (sulfat.)	D 500
H 43	Comb. Sulfuric Anhydride Extraction Test (for sulfated Oils)	D 500

Test methods, leather testing

ALCA No.	Methods	ASTM No.
H 44	Sulfuric Anhydride Ash-Gravimetric Test (true sulfonated)	D 500
H 46	Total Active Ingredients	D 500
H 47	Unsaponifiable Non-Volatile Matter	D 500
H 48	Inorganic Salts	D 500
H 49	Total Alkalinity and Total Ammonia	D 500
H 50	Acidity as Free Fatty Acids or Acid Number in Absence of Ammonia or Triethanolamine Soaps	D 500
H 51	Acidity as Free Fatty Acids or Acid Number in Presence of Dark Coloured Oils but in Absence of Ammonia or Triethanolamine Soaps	D 500
H 52	Acidity as Free Fatty Acids or Acid Number in Presence of Ammonia or Triethanolamine Soaps	D 500
	Standard test method for pH of wet blue	D 6657
	Standard test method for volatile matter (moisture) in wet blue by oven drying	D 6658
	Sampling	
J 1	Sampling Light Leather for Physical Tests	D 2813
J 2	Sampling Heavy Leather for Physical Tests	D 2813
J 15	Sampling of Vegetable Tanned Leather	D 2813
J 25	Sampling of Mineral Tanned Leather	D 2813
	Standard practice for sampling and preparation of wet blue for physical and chemical tests	D 6659
	Leather Finishes	
K 1	Total Solids and Ash in Leather Finish	D 4906
K 5	Nitrocellulose in Finish on Leather	D 4906
K 11	Tackiness of Finish on Leather	D 4908

Preparation of samples for analysis

The leather specimen for the chemical analysis is passed through a cutter mill, and the pulverized leather is called ”leather powder” or ground leather.

Suitable for this purpose are all types of mills fitted with a 4 mm screen and driven at a speed of 700 –1000 r.p.m.

Sampling according to IUC/2 and IUP/2

1. Sampling location for skins, whole hides and sides

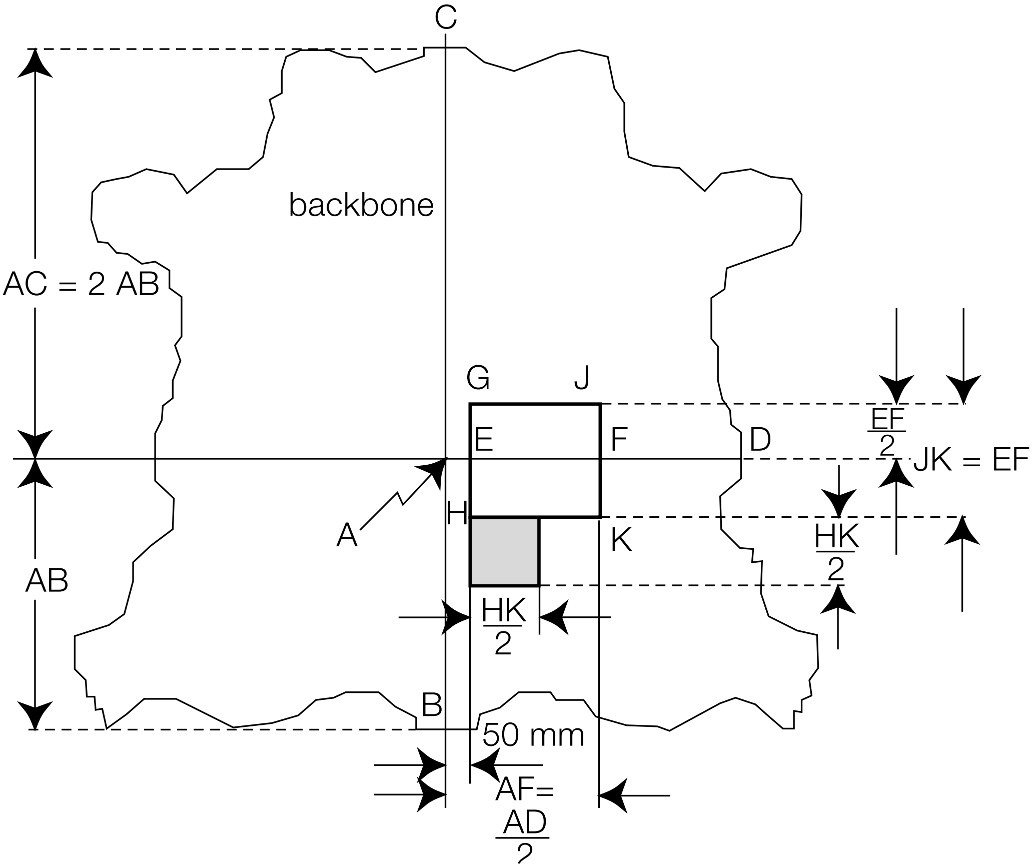

2. Sampling location for shoulders

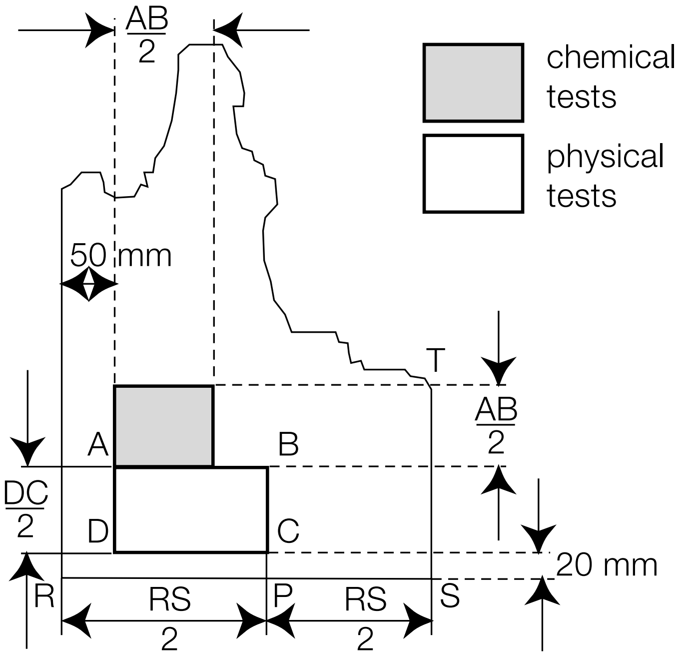

3. Sampling location for bends

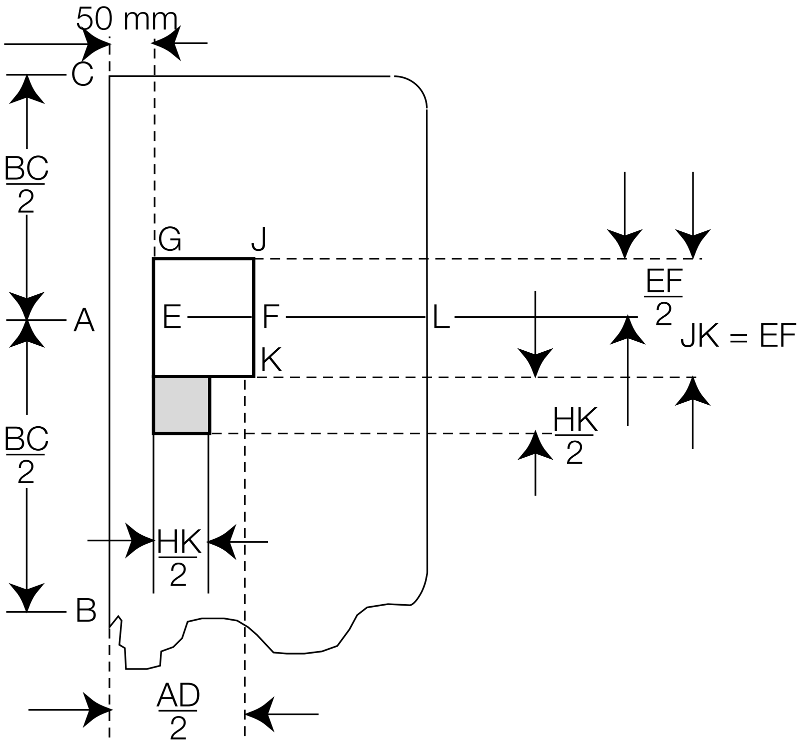

4. Sampling location for bellies (flanks)

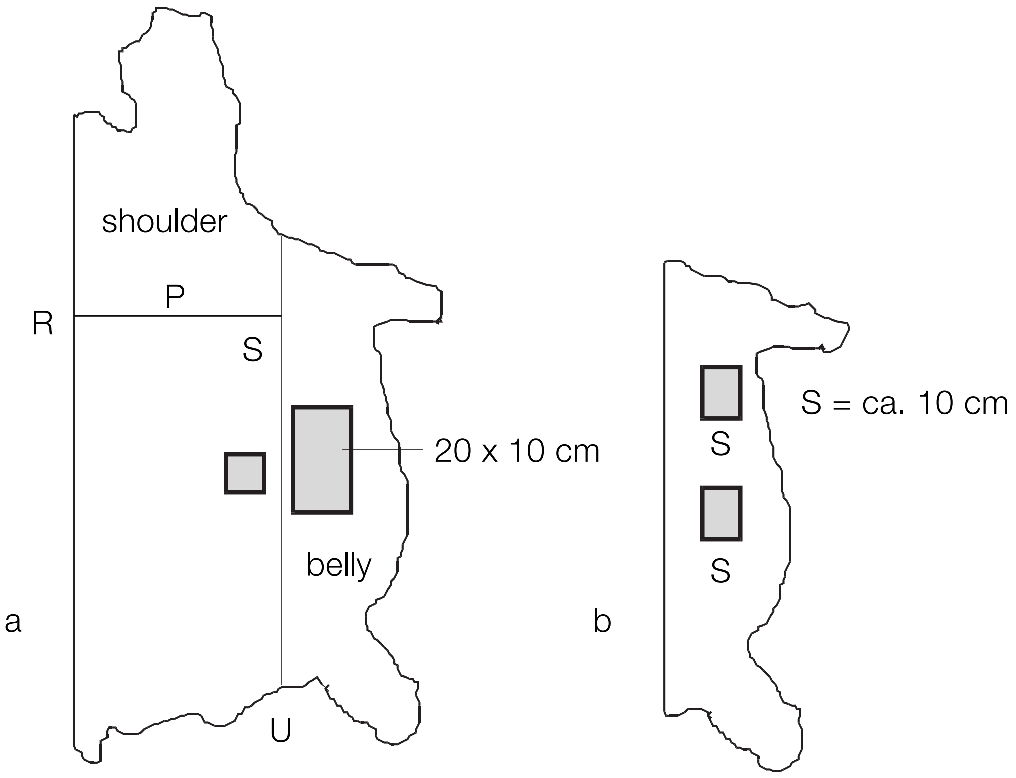

a. sampling location, if no physical tests are required
b. sampling location, if physical tests are required

Calculation and evaluation of test results

Determination of water content (IUC/5, DIN 53304)

$$\text{Water content in \%} = \frac{G_1 - G_2}{G1} \times 100$$

G_1 = weight of sample before drying
G_2 = weight of sample after drying

Determination of substances extractable with dichloromethane (IUC/4, DIN 53304)

E. g. fats and other soluble substances

$$\text{Extractable substances in \%} = \frac{\text{g extract} \times 100}{\text{g weight of sample}}$$

Determination of substances removable by washing (IUC/6, DIN 53307)

a. $$\text{Total loss by washing in \%} = \frac{\text{g solids}}{\text{g weight of sample}} \times 100$$

b. $$\text{Sulfate ash removable by washing in \%} = \frac{\text{g sulfated residue on ignition}}{\text{g weight of sample}} \times 100$$

c. Organic substances removable by washing in % = difference between total loss by washing and sulfated ash removable by washing.

Determination of ash (IUC/7, DIN EN ISO 4047)

a. $$\text{Total ash in \%} = \frac{\text{g total sulfated ash}}{\text{g weight of sample}} \times 100$$

b. water-insoluble ash in % (determined by calculation) = % total sulfated ash minus % sulfated ash removable by washing.

Determination of chrome (IUC/8, DIN 53309)

a. Iodometric determination of chrome

1 ml 0.1 N Na-thiosulfate solution % 1.734 mg Cr
1 ml 0.1 N Na-thiosulfate solution % 2.534 mg Cr_2O_3

b. Titration with iron (II) sulfate solution

1 ml 0.1 N iron (II) sulfate solution % 1.734 mg Cr
1 ml 0.1 N iron (II) sulfate solution % 2.534 mg Cr_2O_3

Determination of water-soluble magnesium salts
(IUC/9, DIN ISO 5399)

$$\%\ MgSO_4 \times 7H_2O \text{ (Epsom salt)} = \frac{\text{ml 0.01 m Komplexon (III) solution}}{\text{g weight of sample}} \times 0.2465$$

Determination of total nitrogen content, content of ammonium salts, calculation of skin substance (IUC/10, DIN 53308)

a. % total nitrogen
1 ml 0.5 N $H_2\ SO_4$ % 7 mg nitrogen

b. Ammonium nitrogen
1 ml 0.5 N $H_2\ SO_4$ % 1.4 mg nitrogen

Ammonium sulfate content in mg $(NH_4)_2SO_4$ = mg N x 4.71

Difference value

The difference value is the difference between the pH of a solution and that of its 1 : 10 dilution.

Fixed tannin (vegetable)

% fixed tannin = 100 minus the sum of moisture, ash, fat, organic loss by washing and skin substance.

Degree of tannage (vegetable)

The degree of tannage indicates the number of parts of tannin fixed by 100 parts of skin substance.

$$\text{Degree of tannage} = \frac{\text{\% fixed tannin}}{\text{\% skin substance}} \times 100$$

Yield value (analytical)

The yield value indicates the amount of vegetable tanned leather containing 14 % of water obtained from 100 g skin substance.

$$\text{Yield value} = \frac{10\,000}{\text{\% skin substance}}$$

Apparent density

$$\text{Apparent density in g/cm}^3 = \frac{\text{mass (weight) of leather in g}}{\text{volume of leather in cm}^3}$$

$$\text{Volume of leather} = \frac{d^2 \text{ (in cm)} \times 3.14 \times \text{average thickness (in cm)}}{4}$$

Measurement of tensile strength, elongation at break, breaking load (IUC/6, DIN 53328)

$$\text{Tensile strength in N/mm}^2 = \frac{\text{breaking load N}}{\text{thickness in mm} \times \text{width in mm}}$$

Breaking load N = highest load reached at break

$$\text{Elongation at break in \%} = \frac{\text{mm length at break} - \text{mm initial length}}{\text{mm initial length}} \times 100$$

Measurement of tearing load (split tear strength) (IUC/8, DIN 53329)

Split tear force in N = mean value of tearing load

Tearing load in N/mm = force applied to tear specimen

Stitch tear strength (according to DIN 53331) = force in N

Water absorption after Kubelka (static) (IUC/7, DIN 53330)

$$\text{Water absorption in \% by vol.} = \frac{\text{volume of water absorbed in ml}}{\text{volume of sample in cm}^3}$$

$$\text{Water absorption in \% by wt.} = \frac{\text{weight of water absorbed in g}}{\text{mass weight of sample in g}}$$

Static water absorption (BASF method) - simple test

A piece of leather (ca. 10 x 10 cm is completely immersed in water for a defined period (1 or 2 hours).

$$\text{Static water absorption in \% by wt.} = \frac{\text{weight before storage}}{\text{weight after storage}}$$

Stripe test (BASF method)

A stripe of leather (ca. 10 x 1 cm) is hung into water for 2 hours up to a defined mark. The distance the water has risen at the surface and at the edge is determined in mm.

Water absorption, water penetration in penetrometer (Dynamic)

(Bally penetrometer test IUP/10, DIN 53328)

The most suitable flexing amplitude depends on the thickness of the leather, viz. 5 %, 7.5 %, 10 % or 15 %.

Penetration time is recorded in minutes.

$$\text{Water absorption in \%} = \frac{\text{weight of sample after flexing} - \text{weight before flexing}}{\text{weight of sample before flexing}}$$

Water transmitted in g = gain in weight of absorbent cloth

Measer test (ASTM D 2099)

Test specimens are flexed in a dilute solution of common salt . The number of flexes endured by the leather at the point at which the water penetrates are counted. The dynamic water absorption is often tested after 15000 to 20000 flexes or at the point of penetration.

Water vapour permeability (IUP/15, DIN 53333)

$$\text{Water vapour permeability in mg/cm}^2 \cdot \text{h} = \frac{7640 \text{ x } m}{d^2 \text{ x } t}$$

m = gain in weight in mg between two weighings
d = inner diameter in mm in bottle neck
t = time in minutes between two weighings

Quality requirements for the main types of leather
(General data)

	Shoe upper leather					
	Box calf	Box side	Corrected grain side	Glazed kid	Water proof (comb. tanned)	Water proof (chrome tanned)
Sulfate ash %	max. 2 % above the content of tanning oxide					
Chromium oxide content %	> 2.5	> 2.5	> 2.5	> 2.5	> 1.2	> 2.5
Fatty substances %	3–8	5–16	5–16	4–8	<16	8–15
Loss by washing %	< 2.0	< 2.0	< 2.0	< 2.0	< 2.0	< 2.0
Degree of tannage	–	–	–	–	> 30	–
pH (1 : 20)	aqueous extract not below pH 3.5;					
Tensile strength N/mm^2	t 20	t 20	> 20	> 20	> 25	> 25
Elongation at break %	> 40	> 40	> 40	> 40	> 40	> 40
Elongation in % at 2 N/mm^2	! 14	! 14	< 14	< 14	< 16	< 14
Split tear force N/mm	> 40	> 40	> 25	> 25	> 50	> 50
Stitch tear strength N	> 80	>100	> 80	> 80	>100	>120
Water penetration in min (penetrometer)	t 60	> 20	> 20	> 20	>180	>120
Water absorption after 60 min	< 20	< 30	< 30	< 30	< 20	< 25
Water absorption – Kubelka after 2 h	< 60	< 60	< 60	< 60	< 30	< 30
after 24 h	< 85	< 85	< 85	< 85	< 40	< 40
Grain distension (Lastometer), mm	t 7.0	t 7.0	t 7.0	t 7.0	t 7.0	t 7.0

		Sole leather			**Lining leather**			
Vegetable tanned leather	Suede (cattle, calf, goat, sheep)	Sole leather modern tannage	Sole leather old pit tannage	Insole leather	Insole, sock lining (sheep), combination tanned	Vegetable tanned	Combination tanned	Chrome tanned
max. 2 % above the content of tanning oxide								
–	> 2.5	–	–	–	< 0.8	–	< 0.5	< 2.5
18–26	2–6	< 3.5	< 2.0	< 4.0	< 4.0	4–8	5–11	5–11
< 6.0	–	<14.0	< 6.0	<10.0	<10.0	< 6.0	< 3.0	< 3.0
> 50	–	60–95	60–95	60–95	> 50	>50	>40	–
		at pH values below 4.0 difference value not above 0.7						
> 25	> 20	> 25	> 25	> 20	> 10	> 15	t 15	t 20
> 40	> 40	< 30	< 35	< 35	< 40	< 70	<100	<100
–	–	–	–	–	–	–	–	–
> 40	–	–	–	–	–	> 15	> 15	> 40
>100	> 80	>130	>130	>125	–	> 40	> 40	> 40
> 20	–	–	–	–	–	–	–	–
< 30	–	–	–	–	–	–	–	–
< 35	<100	< 40	< 40	> 50	> 50	> 75	> 75	> 75
< 45	<125	< 50	< 50	–	–	>100	>100	>100
t 7.0	–	–	–	–	–	–	–	–

Quality requirements for the main types of leather

(General data)

	Upholstery and light leather				**Clothing leather**	
	Upholst. leather, veget. tanned	Upholst. leather, comb. tanned	Upholst. leather, chrome tanned	Light leather, veget. tanned	Clothing leather, chrome tanned	Glove leather, chrome tanned
Sulfate ash %	max. 2 % above the content of tanning oxide					
Chromium oxide content %	–	> 0.8	> 2.5	–	> 2.5	> 2.5
Fatty substances %	5–11	5–11	5–11	3–8	<16–18	10–18
Loss by washing %	< 7.0	< 7.0	–	< 6.0	< 2–3	< 2.0
Degree of tannage	>50	>30	–	>50	–	–
pH-Wert (1 : 20)	aqueous extract not below pH 3.5;					
Tensile strength N/mm^2	> 20	> 25	> 27.5	> 10	> 25	> 25
Elongation at break %	< 50	< 50	< 75	< 50	< 60	< 50
Elongation in % at 2 N/mm^2	–	–	–	–	< 20	< 20
Split tear force N/mm	> 40	> 40	> 50	> 10	> 35	> 35
Stitch tear strength N	>100	>100	>110	–	>100	>100
Water penetration in min. (penetrometer)	–	–	–	–	> 40	–
Water absorption after 60 min.	–	–	–	–	< 25	–
Water absorption – Kubelka after 2 h	–	–	–	–	–	–
after 24 h	–	–	–	–	–	–
Grain distension (Lastometer), mm	–	–	–	–	–	–

** for chamois leather pH 4.0–10.0; for raw skin and transparent leather pH 4.0–8.0*

		Technical leather						
Glove leather, water-repell.	Hat sweat band leather, veget. tann.	Oil tanned leather	Harness leather, veget. tanned	Harness leather, chrome tanned	Football leather, chrome tanned	ASA leather, chrome tanned	Raw hide a. transp. leather	Chamois leather
may. 2 % above the content of tanning oxide								
> 2.5	–	–	–	> 2.5	> 2.5	> 4.0	–	–
<23	4–12	<35	<25	<25	4–10	5–13	–	<10
< 2.0	< 6.0	–	< 7.0	–	–	–	–	–
–	>50	–	>30	–	–	–	–	–
		at pH values below 4.0, difference value not above 0.7*						
> 20	> 12	> 35	> 20	> 27.5	> 30	> 15	> 60	> 10
> 50	–	< 90	< 50	< 75	< 70	< 70	< 35	< 50
> 20	–	–	–	–	–	> 8	–	–
> 35	> 15	–	> 40	> 50	> 40	> 30	–	> 15
>100	> 30	–	>100	>110	>120	> 75	–	> 35
>180	–	–	–	–	–	–	–	–
< 25[1]	–	–	–	–	–	–	–	–
–	–	–	–	–	< 35	–	–	>300[2]
–	–	–	–	–	< 70	–	–	>400[3]
–	–	–	–	–	–	–	–	–

[1] *after 180 minutes;*
[2] *after 2 minutes;*
[3] *after 60 minutes*

Provisional quality requirements for shoe upper leather
(laid down by the German leather industry and the General Association of the German Shoe Industry)

Test/type of leather	Quality requirements	
	dry	wet
1. **Flexing endurance** (flexometer) (IUP/20, DIN 53351) Use DIN 53340 for testing low flexibility leather		According to DIN 53351 leather is moistened
Patent leather	20 000	10 000
Other types of leather	50 000	10 000
2. Adhesion of finish (IUF 470; N/cm width)		
Cattle hide leather, full grain and slightly corrected	3.0	2.0
Cattle hide leather, deeply buffed	5.0	3.0
Fashionable leather (with thin finish coats, e. g. box calf, glazed kid, lamb skin leather)	2.0	
3. Rub fastness (VESLIC rub tester) (DIN 53339)	Rub cycles	Grey Scale
Leather for street shoes		
Test fabric dry, leather dry	50	minimum rating 4
Test fabric wet, leather dry	50	
Leather for shoes without lining		
Inside; test fabric dry	50	minimum rating 4
Inside; test fabric wet	50	
Inside; test fabric wetted with alkaline perspiration solution	20	
Fashionable leather		
Test fabric dry, leather dry	50	minimum rating 4
Test fabric wet, leather dry	20	
Test fabric wetted with aqueous solvent-free polish, leather dry	20	
4. Fastness to hot plating (IUF/458, DIN 53342)	minimum 80 °C no damage	
5. Distention of grain (IUP/9, DIN 53325)	Dome height minimum 7.0	

Test/type of leather	Quality requirements	
6. Split tear force (IUP/8, DIN 53329, method B)		
Leather for lined shoes	minimum 18 N	
Leather for unlined shoes	minimum 25 N	
7. Substances extractable with dichloromethane (IUC/4, DIN EN ISO 4048)		
for one-component adhesive	up to 9 %	
for two-component adhesive	up to 14 %	
for special polyurethane adhesive	above 14 %	
for vulcanizing	up to 8 %	
for PVC mould-on	up to 15 %	
8. Water vapour permeability (IUP/15, DIN 53333) After 20 000 flexes in flexometer (DIN 53351) with finished leathers		
Full grain leather	1.0 mg/(cm^2 x h)	
9. Water spotting test (IUF/420, DIN EN ISO 15700)	no spots	
Tests as required		
10. Tensile strength (IUP/6, DIN 53328)	minimum 150 N	
11. Grain distention and elongation test for special leathers, e. g. clogs		
Lastometer test (IUP/9, DIN 53325)	dome height minimum 9.0 mm	
Elongation test (IUP/9, DIN 53328)	without grain cracking min. 35 %	
12. Waterproofness test (IUP/10, DIN 53338)	Water penetr.	Water absorpt.
Waterproof leather	min. 120 min	max. 25 %
13. Water vapour absorption (DIN EN 344)	min. 8 h	5 mg/cm^2
14. Cold flexing endurance (DIN 53351)		
at –10 °C	min 30 000 flexes	
15. Lightfastness (IUF/401 – daylight)	min. rating 3	
(DIN EN ISO 105 B-02)	min. rating 3	
16. Migration fastness (DIN 53343)	max. rating 3	

Test/type of leather	Quality requirements
17. pH value of aqueous extract (IUC/11, DIN EN ISO 4045)	not below 3.5
18. Mineral substances removable by washing (IUC/6, DIN 53307)	not above 1.5

Provisional quality requirements for shoe lining leather

(laid down by the German Leather Associations)

Test/type of leather		Quality requirements	
		aniline leather	finished leather
1. Rub fastness test			
(IUF/450, DIN 53339)	Rub cycles		
Leather dry	100	> rating 3	> rating 3
Leather dry	50	> rating 3	> rating 4
Leather wet	20	> rating 3	> rating 4
Leather dry wetted with perspiration solution (pH 9)	20	> rating 2 – 3	> rating 2 – 3
Leather dry wetted with gasoline (boiling point 80 – 110 °C)	20	no staining	
2. Stripe test for water fastness			
Testing after 2 h and 8 h		no staining of diffusion zone = rating above 3	
3. Water vapour permeability		minimum 1.0 mg/cm^2 h	
4. Elongation at break (DIN 53328) (minimum leather thickness > 0.4 mm)			
Skivers, unlaminated		minimum	25 %
Skivers, laminated		minimum	30 %
Other leathers		minimum	30 %
5. Mineral substances removable by washing			
(DIN 53307)		not over	1,5 %
6. Substances extractable with dichloromethane			
(DIN EN ISO 4048)			
Lining leather		maximum	10 %
Lamb woolskin lining		maximum	8 %

Test/type of leather	Quality requirements aniline leather	 finished leather
7. **pH value** (DIN EN ISO 4045)	not below	3.5
8. **Split tear strength** (as required) (DIN 53329)	only lining leather for reinforcement minimum 15 N/mm	

Provisional quality requirements for furniture leather

(laid down by German Leather Associations)

Test/type of leather	Quality requirements dry	 wet	 perspiration solution
1. **Rub fastness test** (DIN 53339 = rub cycles)			
Rough leather	50	20	20
Grey Scale contrast	maximum rating 3		
Smooth leather	500	80	50
Grey Scale contrast	maximum rating 4		
2. **Light fastness** (DIN EN ISO 105-B02)			
Rough leather	minimum rating 3		
Smooth leather	minimum rating 4		
3. **Flexing endurance** (DIN 53351)	20 000		
4. **Adhesion of finish coat** (IUF 470)	1.5 N/cm		
5. **Split tear force** (DIN 53329)	20 N/mm thickness		
6. **pH value, aqueous extract** (DIN EN ISO 4045)	minimum 3.5		

Tests not required but to be carried out if necessary:
migration fastness,
scratch resistance,
stability to UV light,
stability to amines.

For **car upholstery** leather, the individual companies of the automobile industry have their own quality standards.

Provisional quality requirements for clothing leather

(laid down by the EC Leather Institutes, Specification Commission)

Test/type of leather	Quality requirements suede leather, nubuck, aniline nappa	nappa leather, finished
1. Light fastness (DIN EN ISO 105-B02) IUF 402 – xenotest	rating 3	rating 4
2. Rub fastness (IUF 450)	Rub cycles	
Felt dry	20	50
Felt wet	10	20
Felt wetted with perspiration solution (pH 9)	10	20
3. Flexing endurance (DIN 53351)	–	> 50 000
4. Adhesion of finish (IUF 470)	–	> 2.0 N/10 mm
5. Split tear force (IUP/8, DIN 53329)	15 N/mm	20 N/mm
Tests as required		
Tensile strength (IUP/6, DIN 53328)	12 N/mm^2	12 N/mm^2
Washability (based on IUF 423)	After washing, drying and light staking: no change in leather handle; change in leather shade > rating 3 on Grey Scale (4 is recommended). Change in area < ±3% (BLMRA* < ±5%).	
Resistance to dry cleaning	After dry cleaning/refatliquoring: no change in handle, shade > rating 3–4, change in area < ±3% (BLMRA ±5%).	After dry cleaning/refatliquoring: no peeling of finish; changes as specified for suede and nubuck.

Test/type of leather	Quality requirements suede leather, nubuck, aniline nappa	 nappa leather, finished
Wettability (based on IUF 420)	10 minutes	15 minutes
pH value (IUC/11)	minimum 3.5 (EMPA > 3.3; diff. value < 0.70)	minimum 3.5

** BLMRA = British Leather Manufacturers Research Association*

Testing of leather dyes and leather dyeings

IUF methods

The methods of the International Fastness Union for Leather Dyes and Dyed Leather are denoted by the letters
I.U.F. = International Union Fastness.

The following countries are at present members of the International Fastness Union:
Belgium, Czech Republic, Denmark, France, Germany, Great Britain, Greece, India, Israel, Italy, Japan, Netherlands, Spain and Switzerland.

Numbering system of guidelines and test methods

(IUF 105)

Group 1 =	includes Nos. 100 – 199 Scope, principle, assessment; preparation of substrates for producing dyeings.
Group 2 =	includes Nos. 200 – 299 Testing the properties of dyes and finishing agents without the aid of leather.
Group 3 =	includes Nos. 300 – 399 Testing the properties of dyes and finishing agents by application on leather.
Group 4 =	includes Nos. 400 – 499 Testing the colour fastness of leather.

IUF test methods

IUF 105 = Numbering system of guidelines and test methods

IUF 120 = Principles of test procedures (% DIN EN ISO 105-A01*)

IUF 131 = Grey Scale for assessing the change in colour (% DIN EN ISO 105-A02*, visual; % DIN EN ISO 105-A05*, instrumental)

IUF 132 = Grey Scale for the determination of the colouring of the accompanying material (% DIN EN ISO 105-A03*, visual; % DIN EN ISO 105-A04*, instrumental)

IUF 151 = Process for the preparation of standard chrome grain leather (D)

IUF 201 = Solubility of leather dyes (D)

IUF 202 = Colour fastness of dye solutions to acids (D)

IUF 203 = Stability of dye solutions to acids (D)

IUF 204 = Stability of dye solutions to alkali (D)

IUF 205 = Stability of dye solutions to hard water (D)

IUF 401 = Colour fastness of leather to daylight (% DIN EN ISO 105-B01*)

IUF 402 = Colour fastness of leather to artificial light (xenon lamp) (% DIN EN ISO 105-B02*)

IUF 420 = Colour fastness of leather to water spotting (% DIN EN ISO 15700)

IUF 421 = Colour fastness of leather to water (% DIN EN ISO 11642)

IUF 423 = Colour fastness of leather to washing (% DIN EN ISO 15703)

IUF 426 = Colour fastness of leather to perspiration (% ISO 11641)

IUF 434 = Colour fastness of leather to dry cleaning (% DIN EN ISO 11643)

IUF 435 = Colour fastness of leather to washing in the washing machine (% DIN EN ISO 15702)

IUF 441 = Colour fastness of leather in respect of staining crude crepe rubber (D)

IUF 442 = Colour fastness of leather in respect of staining plasticized polyvinyl chloride (% DIN EN ISO 15701)

IUF 450 = Colour fastness of leather to rubbing (% DIN EN ISO 11640)

IUF 454 = Fastness to buffing of dyed leather (D)

IUF 458 = Colour fastness of leather to hot ironing (D)

IUF 470 = Determination of adhesion of finish to leather (ISO 11644)

Tests not within the IUF range

- Solubility of leather dyes – BASF Method
- Fogging test (DIN 75201)
- Lightfastness at high temperature (DIN 75202, DIN EN ISO 105-B06), especially for automotive leather

** = equivalent textile standard*
(D) = draft or VESLIC methods

Testing of leather dyes

Determination of dye class

a. precipitation reaction
b. behaviour in dissolving

Determination of pure dye content

a. determination of ash
b. spectrophotometer

Testing of homogeneity

a. blowing test
b. capillary method

Determination of solubility (BASF Method)

The solubility is tested in distilled water at 20 °C and 60 °C. The amount of dye is determined that stays dissolved after dissolving by boiling and cooling down to the temperatures specified above. The results are recorded in g/l.

Solubility ratings:
5 = more than 40 g/l
4 = up to and including 40 g/l
3 = up to and including 30 g/l
2 = up to and including 20 g/l
1 = up to and including 10 g/l

Intermediate ratings, e. g., 3 – 4, may be given.
(For the technique of low temperature dyeing (below 40 °C), the dyes to be used should be tested especially for this purpose.)

Testing of dye solutions

Strength of dye solution

Assessment without dyeing test on leather. This can be carried out with the aid of:

a. colorimeter
b. filter paper.

Stability to acids (IUF 203)

The resistance of a dye solution to flocculation under the action of formic acid and sulfuric acid.

Ratings:

5 = no flocculation with either one of the two acids
4 = no flocculation with formic acid; beginning flocculation with sulfuric acid
3 = no flocculation with formic acid; flocculation with sulfuric acid
2 = beginning flocculation with formic acid
1 = distinct flocculation with both acids

Fastness to acids (IUF 202)

The resistance of the shade of dye solutions to dilute acids. For testing, the dye solutions are poured on filter paper.

The assessment is made with the aid of the Grey Scale.

Ratings: from 5 = no change in shade
to 1 = strong change in shade

Fastness to alkali

The resistance of the colour of dye solutions to dilute alkalis. For testing, the dye solutions are poured on filter paper.

The assessment is made with the aid of the Grey Scale.

Ratings: from 5 = no change in colour
to 1 = strong change in colour

Stability to hard water (IUF 205)

The behaviour of dyes in water of 20 and 40 German degrees of hardness.

Water of the degree of hardness specified above is prepared by dissolving the required amount of calcium chloride and magnesium sulfate in distilled water.

The purpose of this test is mainly to find out whether a dye for brush or spray staining has to be dissolved in condensation water.

Ratings:

5 = no flocculation with hard water
4 = no flocculation with water containing 200 mg CaO per litre, beginning flocculation with water containing 400 mg CaO per litre
3 = no flocculation with water containing 200 mg CaO per litre, distinct flocculation with water containing 400 mg CaO per litre
2 = beginning flocculation with water containing 200 mg CaO per litre
1 = distinct flocculation with water containing 200 mg CaO per litre

Testing of leather dyeings

Fastness to formaldehyde (IUF 424)

Determination of the change in shade of dyed leather under the action of formaldehyde fumes.

The assessment is made with the aid of the Grey Scale.

Ratings: from 5 = no change
to 1 = strong change in shade.

Fastness to fatliquor

The bleeding in anionic fatliquor is assessed according to the behaviour of chrome calf leather dyed with 1% of dye and subsequently fatliquored with 2% of Lipoderm Liquor PN and left in the wet state for two hours under a load between two sheets of filter paper.

The staining of the filter paper is assessed with the aid of the Grey Scale.

Ratings: from 5 = no change
to 1 = strong staining.

Penetration

The dye penetration is tested on freshly tanned chrome calf leather (neutralized and subsequently dyed) and on crusted chrome suede leather.

Assessment (leather cross-section)

5 = complete penetration
4 = 75% penetration
3 = 50% penetration
2 = 25% penetration
1 = superficial colouring

Levelling power

Can be assessed only on several leathers or batches of leather. The levelness of the dyeing over the entire leather surface and the colouring or covering up of leather faults are assessed.

Fastness to water spotting (IUF 420)

Two drops of distilled water are dropped on the surface of the leather to be tested. After one drop of water has evaporated at 20 °C, the change in shade of the leather is determined with the aid of the Grey Scale. The remainder of the water of the other drop of water is removed with filter paper after 30 minutes, and any physical change is recorded.

Fastness to water (IUF 421, DIN EN ISO 11642)

Like the test for fastness to perspiration, but demineralized water is used instead of the perspiration solution.

Fastness to washing (IUF 423, DIN EN ISO 15703)

This property is tested by washing leather with a solution of 5 g/l lauryl sulfate in a neutral (alkali-free) bath and assessing the change in shade and staining of accompanying textile fabric.

The leather specimens are attached to equal sized cuttings of accompanying fabric and washed in 100 ml of 0.5 % lauryl sulfate solution for 30 minutes at 30 °C in a "Wacker" drum.

The change in shade is assessed with the aid of the Grey Scale for change in shade and the staining of the accompanying fabric is determined with the aid of the Grey Scale for bleeding.

Ratings: from 5 = no change in shade or staining
to 1 = strong change in shade or staining.

Fastness to perspiration (IUF 426)

Specified, undyed multifibre fabric (ISO 105-F 10 = cellulose acetate, cotton, polyamide, polyester, acrylic and wool) or homogeneous fibre material soaked in artificial perspiration solution and laid on the side of the leather cutting to be tested. The composite test specimen is placed under a load of 4.5 kg (123 N/cm^2 = 125 p/cm^2) at 37 ± 2 °C for one hour in a suitable apparatus (hydrotester or perspirometer) and is then dried freely suspended under standard climatic conditions (20 °C and 65 % R.H.).

On finished leathers, the film is removed with abrasive paper (grit size 180) without damaging the grain surface to any extent.

Perspiration solution per litre:
5.0 g sodium chloride, NaCl;
5.0 g tris-(hydroxymethyl)-aminomethane, $NH_2C(CH_2OH)_3$;
0.5 g urea, NH_2CONH_2;
0.5 g nitrilotriacetic acid, $N(CH_2COOH)$;
adjusted to pH 8.0 ± 0.1 with hydrochloric acid.

Report the numerical ratings for the colour change of each side of the specimen and the numerical rating for the staining of each piece of the specified accompanying fabric with the aid of the Grey Scale.

The ratings range from 5 = no staining or no colour change
to 1 = strong staining or strong colour change.

Fastness to solvents

Specimens of 1% dyeings (0.5 g) are placed for 24 hours in 20 ml of the appropriate solvent and bleeding of the dye in the solvent is then assessed.

Any solvent desired can be used.

Ratings:

5 = no bleeding in the solvent
4 = slight bleeding in the solvent
3 = appreciable bleeding in the solvent
2 = strong bleeding in the solvent
1 = very strong bleeding in the solvent

Fastness to dry cleaning (IUF 434 E)

Accurately measured leather specimens are drummed in a “Wacker” drum for 30 minutes with a solvent, e. g. perchloroethylene or R 113 (trifluorotrichloroethane), together with a specified accompanying multi-fibre fabric (e. g., ISO 105-F 10) and TEFLON balls (specified size), with or without addition of triolein and solvent soaps. The treated leather specimens are placed between blotting paper under a load of 4.5 kg for 1 minute and aired off. They are then examined for change in shade, handle, colour, staining of the accompanying fabric and, if necessary, for changes in wettability, light fastness and rub fastness (dry and wet).

Dry and wet rub fastness

Testing by hand

a. Dry: Rubbing with an untreated white cotton cloth tightly stretched over a cork stopper. Rub ten times back and forth with constant pressure.

b. Wet: Same procedure as in the dry test, except that the cotton cloth is moistened with distilled water and squeezed off to about 100 % water uptake.

Test with VESLIC rub fastness tester (IUF 450)
A dry felt pad or a felt pad moistened with water in the prescribed way is rubbed back and forth under a load of 1 kg on the leather that has been stretched by 0 % or 10 %.

Dry: 20, 50 and 150 rub strokes
(if necessary up to 300 and 500 rub strokes)
Wet: 10 and 50 rub strokes

Report the numerical ratings with the aid of the Grey Scale for the staining of the wool felt and for the change in colour of the leather.

Fastness to diffusion into crude rubber crepe (IUF 441)

The behaviour of the dyeing with regard to migration of dye from the leather into crude rubber crepe is tested. The test specimen is bonded on the side to be tested to crude rubber crepe using white pigmented crude rubber solution and is exposed under a load of 4.5 kg at 50 °C for 15 hours.

The assessment is made with the aid of the Grey Scale.

Fastness to diffusion into PVC (IUF 442, DIN EN ISO 15701)

The behaviour of the dyeing with regard to migration of dye from the leather into plasticized polyvinyl chloride is tested.

The assessment is made with the aid of the Grey Scale.

Fastness to buffing of dyed leather (IUF 454)

The behaviour of the dyed leather is tested by buffing. The leather side to be tested is rubbed back and forth 10 to 110 times on the VESLIC rub fastness tester with a carborundum emery paper (grit size 320) under a load of 500 g.

The assessment of change in colour between the lanes after 10 to 110 rub strokes is made with the aid of the Grey Scale. Before the assessment of the change in colour, the buffed area is brushed in the direction of the nap.

Light fastness

a. Fastness to daylight (IUF 401)
b. Fastness to artificial light (DIN EN ISO 105 B-02)

Leather specimens of not less than 1 cm x 6 cm are exposed to daylight or artificial light under prescribed conditions together with eight light fastness standards which consist of pieces of wool cloth dyed with standard blue dyes of different degrees of fastness.

Standard	Colour Index designation
1	= C. I. Acid Blue 104
2	= C. I. Acid Blue 109
3	= C. I. Acid Blue 83
4	= C. I. Acid Blue 121
5	= C. I. Acid Blue 47
6	= C. I. Acid Blue 23
7	= C. I. Solubilized Vat Blue 5
8	= C. I. Solubilized Vat Blue 8

The fastness is assessed by comparing the fading of the leather specimen with that of the standards. The result is expressed in a numerical fastness rating.

1 = very low
2 = low
3 = moderate
4 = fairly good
5 = good
6 = very good
7 = excellent
8 = outstanding

Intermediate ratings can be given.

For leather testing, the ratings from 1 to 6 will suffice, because the test results are influenced by the amounts and types of tanning agents, fatliquors and auxiliaries used and by the strength of the dyeing and the dyeing method.

Testing of leather finishes

Dry and wet adhesion (IUF 470, ISO 11644)

Measurement of the adhesion (anchorage) of a finish coat to the leather surface.

a. Quick reference test method with adhesive tape.

b. Quantitative measurement in the tensile strength testing apparatus. Leather strips of specified length and width are bonded with a specified adhesive to a firm supporting surface which has been cleaned with hexane or a mixture of alkane at a boiling range of 40 – 80 °C. The bonded specimens are then stripped off in the tensile strength tester at an angle of 90 degrees. At least 4 specimens are tested, two of each in the cross and longitudinal directions to the backbone line.

For the wet adhesion test, the bonded specimens are placed in a glass filled with water. The glass with the specimens is evacuated three times in a vacuum dissicator at 5 kPa maintaining the vacuum each time for 2 minutes. The time between the placing of the specimens into the water and the measuring should be from 60 to 120 minutes.

Composition of adhesive:
A two-component polymer adhesive is used.
20 g Solids Desmocoll 400 dissolved in 80 –100 g ethyl acetate
+ 5 g Hardener Desmodur L 75

The prepared adhesive mixture should be used up within 8 hours after addition of the hardener.

Dry and wet rub fastness (DIN 53339, IUF 450)

Assessment of the resistance of the finished leather surface to abrasion, scuffing and staining.

a. Quick reference test by rubbing with a white cloth under the pressure of a finger.

b. Test with VESLIC rub fastness tester (IUF 450)
Rubbing a dry felt pad or a felt pad moistened in a prescribed way under a pressure of 1 kg back and forth against the leather that has been stretched.

Dry rub fastness:	leather dry, felt dry.
Wet rub fastness:	leather dry, felt wetted.

Assess the degree of damage or change in the finish coat,
staining of the felt pad and change in colour of the test specimen.

Resistance to swelling (DIN 53339, IUF 450)

Assessment of the behaviour of a finish coat when the whole leather is submitted to the action of water.

a. Quick reference test by immersing the leather specimen in water and rubbing subsequently with a dry cloth.

b. Test with VESLIC rub fastness tester

The leather specimen is immersed in water for 1 hour, and a dry felt is then rubbed back and forth.

Rating as in the dry and wet rub fastness tests.

Flexing endurance (DIN 53351, IUP 20)

Measurement of the flexing endurance of leathers and their surface finishes through an angle of 22.5 degrees over a prolonged period.
The test is carried out with the Bally flexometer.

Assessment of damage:

a. Damage to the finish may be of the following kinds: greying, minor and major surface cracks or complete breakthrough, peeling or powdering, loss of adhesion of the finish to the leather or loss of adhesion of one finish layer to another.

b. Damage to the leather may be of the following kinds: cracking of grain layer, development of coarse grain folds (pipey grain), loss of an embossed grain pattern, breakdown of fibres to such an extent that a hole develops through the entire thickness of the leather.

This test can be carried out with both dry and wet leather specimens.

Elasticity

Behaviour of the finish when the leather is stretched and extended.

a. Quick reference mandrel or key test.

b. Test with Lastometer (IUP 9) or Tensometer (IUP 13).
Assess the changes or the breaking of the finish coat before the grain cracks.

Fastness to hot ironing

a. The leather specimen is placed over a slightly rounded edge and plated once back and forth with a hot iron maintained at a constant temperature by thermostat. After each ironing, the test temperature is increased by 25 degrees Celsius. The change in shade, smearing and damage to the finish coat are assessed.

b. Test with VESLIC automatic hot ironing tester (VESLIC rub fastness tester with heatable finger).
The finger has a size of 10 mm x 10 mm and is moved back and forth five times after which the temperature is increased by 20 °C. This is repeated until the finish coat shows damage, smearing or change in shade.

Resistance to hot air

The leather specimen is submitted to the action of a hot air stream at 150 °C for one minute.
The change in shade and other changes in the finish coat are assessed.

Fastness to hot steaming

The leather specimen is placed in a test chamber at 65 °C and 100 % relative humidity.
The migration of dye, bleeding and swelling are assessed.

Light fastness

The light fastness is tested with the xeno tester (cf. page 263).

Resistance to solvents

Acetone is normally used for the test.

Test with VESLIC rub fastness tester
From the rub fastness tester, the base plate in the center of the carriage is removed and replaced by a felt over which the leather specimen is clamped with a distension of 5 %. One ml solvent is dropped at the side on the felt, and after one minute, the leather is distended once again by 5 % and it is then rubbed five times with a dry felt on the finished side under a load of 1 kg.

The finish coat is examined for swelling, softening or smearing.

Resistance to detergents and cleansing agents

Similar to the wet rub fastness test, the finished leather surface is tested with various test solutions.

Resistance to shoe polishes

The leather specimen is tested by rubbing with three basic types of shoe polishes.

Polishability

A drop of water (about 0.15 ml) is applied to the finished leather surface and allowed to evaporate overnight at room temperature. The leather specimen is rubbed with a dry cloth, if necessary after treatment with shoe polish, to determine whether any stains formed can be removed by polishing.

Resistance to abrasion

Measurement of the resistance of the leather surface to abrasion.

For this purpose, the VESLIC rub fastness tester is used on which the felt for the rub fastness test is replaced by a rubber-based abradant surface 15 mm long and 3 mm wide that is rubbed along separate paths against the leather for a fixed number of times under a specified load.

Under a load of 2 kg: 10 to 50 rubbing strokes
Under a load of 5 kg: 5 rubbing strokes

The leather can be tested wet or dry.

The test specimen is examined for changes in the leather surface and for change in shade with the aid of the Grey Scale.

Resistance to ageing

The leather samples are conditioned in the drying oven for

a. 7 days at 50 °C or

b. 3 days at 80 °C

before they are examined for embrittlement or yellowing and for changes in elasticity and flexing endurance.

Fogging test (DIN 75201)

Fogging refers to the condensation of evaporated, volatile components of the interior automobile trim materials on the glass plates, especially on the wind shield.

The test consisting of two different methods is carried out with the fogging tester of Haake-Meßtechnik, Karlsruhe, Germany.

a. Reflectometric test
A car upholstery leather specimen is placed on the bottom of a glass beaker which is immersed to a certain depth into a heated bath (100 °C) regulated by thermostat. On top of the glass beaker, which is closed by means of a cleaned glass plate with seal, cooling plates maintaining a temperature of 21 °C are placed. The cooling causes the substances evaporating from the leather to condensate on the glass plate.
The quantity of fogging condensation on the glass plate is recorded by measuring the 60° angle of reflection of the same glass plate (blind value) without condensation.

Fogging value F_R = quotient in % of the 60° reflectometer value of a glass plate with fogging condensation and the same glass plate without condensation.

b. Gravimetric test
Instead of the glass plate used in the reflectometer test, a light aluminium sheet is used here and the specimens are treated for 16 hours instead of 3 hours at 100 °C.
The condensate is weighed and reported in mg.

Both test methods prescribe that the specimens be dried for 7 days in a dissiccator using phosphorous pentoxide.

Important dimensions for analytics

1 percent (one part in a hundred)	0.01 gram per gram (=one hundredth of a gram/g)	0.01 g/g (10^{-2})
1 permill (one part in a thousand)	1 milligram per gram (= one thousandth of a gram/g)	0.001 g/g (10^{-3})
1 ppm (one part per million)	1 microgram per gram (= one millionth of a gram/g)	0.000 001 g/g (10^{-6})
1 ppb (one part per billion)	1 nanogram per gram (= one billionth of a gram/g)	0.000 000 001 g/g (10^{-9})
1 ppt (one part per trillion)	1 picogram per gram (= one trillionth of a gram/g)	0.000 000 000 001 g/g (10^{-12})
1 ppq (one part per quadrillion)	1 femtogram per gram (= one quadrillionth of a gram/g)	0.000 000 000 000 001 g/g (10^{-15})

Suppliers of standard test methods

1. DIN standards (also DIN EN, DIN EN ISO, ISO)	Beuth Verlag GmbH Burggrafenstraße 6 10787 Berlin or www.beuth.de
2. IUC, IUP, IUF methods	German publications: Eduard Roether Verlag Berliner Allee 56 64295 Darmstadt English publications: Society of Leather Trades’ Chemists 52, Crouch Hall Lane Redbourn, Herts., UK
3. VESLIC methods	Association of Swiss Leather Chemists and Technologists www.veslic.ch
4. BS standards (British)	British Standard Institution Society of Leather Trades’ Chemists 52, Crouch Hall Lane Redbourn, Herts., UK
5. ISO standards	International Organization for Standardization www.iso.org Case Postale 56 CH 1211 Geneva 20
6. ASTM methods (U.S.)	American Society for Testing and Materials, www.astm.org Philadelphia, Pa 19428-2959

pH Value, indicators, charge relations

pH Value

The pH value is the negative logarithm to the base 10 of the hydrogen ion concentration.

Derivation:

In pure water, the concentration of hydrogen ions $[H_3O^+]$ is equal to the concentration of hydroxyl ions $[OH^-]$, viz

$$[H_3O^+] = [OH^-] = 10^{-7}\ \text{mol/l}$$

At this equilibrium, the water has a neutral reaction. In practice, the minus sign is dropped, 10^{-7} = pH 7.

According to the above equation, if the hydrogen ion concentration in an aqueous system is increased, the hydroxyl ion concentration becomes less, and the system has an acid reaction.
If the hydroxyl ion concentration is increased, the hydrogen ion concentration decreases accordingly, and the solution has an alkaline reaction.

pH = 1 acid	β { { { { { {	pH = 7 neutral	{ { { { { { γ	pH = 14 alkaline

Determination of pH value

1. Potentiometric (electrometric)
   with a hydrogen electrode or glass electrode (measuring range pH 0 – pH 14)

2. Colorimetric
   with indicators or indicator papers.

Common indicators

Indicator	Effective pH range	Colour change	Concentration of solution
Thymol Blue	1.2 – 2.8	red – yellow	0.1 % in 20 % alcohol
Dimethyl Yellow	2.9 – 4.0	red – yellow	0.1 % in 90 % alcohol
Bromophenol Blue	3.0 – 4.6	yellow – blue	0.1 % in 20 % alcohol
Congo Red	3.0 – 5.0	blue – red	1 % in water
Methyl Orange	3.2 – 4.4	red – yellow	0.1 % in water
Bromocresol Green	3.8 – 5.4	yellow – blue	0.1 % in 50 % alcohol
Methyl Red	4.8 – 6.0	red – yellow	0.2 % in 90 % alcohol
Litmus	5.0 – 8.0	red – blue	0.3 % in 90 % alcohol
Bromocresol Purple	5.2 – 6.8	yellow – purple red	0.04 % in 90 % alcohol
Bromothymol Blue	6.0 – 7.6	yellow – blue	0.1 % in 20 % alcohol

Common indicators

Indicator	Effective pH range	Colour change	Concentration of solution
Neutral Red	6.8 – 8.0	red – yellowish orange	0.1 in 70 % alcohol
Phenol Red	6.6 – 8.0	yellow – red	0.02 % in 90 % alcohol
o-Cresol Red	7.0 – 8.8	yellow – purple red	0.1 % in 20 % alcohol
Tropaeoline 000	7.6 – 8.9	yellowish green – pink	1 % in water
Phenolphthalein	8.2 –10.0	colourless – pink	1.0 % in 50 % alcohol
Thymol Blue	8.0 – 9.6	yellow – blue	0.1 % in 20 % alcohol
Thymolphthalein	9.4 –10.6	colourless – blue	0.1 % in 90 % alcohol
Alizarin Yellow R	10.1–12.0	yellow – red	0.1 % in 50 % alcohol
Tropaeoline O	11.3 –13.0	yellow – orange red	0.1 % in water

pH colour range of bromocresol green

Mainly used in pickling, chrome tanning and neutralization.

Colour: Yellow = pH 3.5 and lower
Yellow-green = pH 4.0
Green = pH 4.5
Blue-green = pH 5.0
Blue = pH 5.5 and higher

Determining the charge on leather surfaces with charge indicator

Composition:

0,05 g Luganil Orange GGC, dissolved in 10 ml water
0,0025 g Crystal Violet, dissolved in 90 ml ethanol
= 100 ml indicator

Procedure:

Test by dropping indicator solution on to the leather surface.

Cationic charge = yellow inner circle surrounded by a blue ring

Anionic charge = blue inner circle surrounded by a yellow ring

Charge relations on pelts and leathers

$^{+}H_3N$ β ⌇ ⌇ ⌇ ⌇ ⌇ **pelt collagen** ⌇ ⌇ ⌇ ⌇ ⌇ γ **COO^{-}**
(Amino group) (Carboxyl group)

⊇

isoelectric point (I.P.) at
pH ~ 5

α	α
By lowering the pH	**By increasing the pH**
Dissociation of amino groups	Dissociation of carboxyl groups
Increasing positive charge and increasing reaction with	Increasing negative charge and increasing reaction with
ANIONS	**CATIONS**
e. g. vegetable and synthetic tannins, masked chromium salts, anionic dyes, sulfated and sulfonated oils or fatliquoring agents, anionic wetting and dyeing auxiliaries.	e. g. common basic chromium(III) salts, aluminium tanning agents, cationic resin tanning agents, basic dyes, cationic fatliquoring agents and auxiliaries.

Change of I.P.
by tannage

α	α
Shifting towards the acid side (down to pH 3 and lower) by aldehyde tannage, sulfochloride tannage, vegetable and synthetic tannage, tannage with masked chrome tanning agents.	Shifting towards the alkaline side (up to pH 7 and more) by the common cationic one-bath chrome tannage, cationic resin tannage.

Relations between weight, area and yield in leather production

Weight designations used in leather production

Green weight = flayed hide or skin (cooled, bled thoroughly; minus horns, hoofs, ears, legs, tail bones, udder, adhering flesh).

Salted weight = weight after salting with solid salt or after treatment in brine.

Water content of hides and skins 30 – 45 %.

Heavy hides = 7 – 15 % loss in weight of green weight
Calf skins = 6 – 12 % loss in weight of green weight
Sheep, goat skins = 4 – 10 % loss in weight of green weight
Pig skins = 2 – 4 % loss in weight of green weight

General method of calculations (cattle hides, calf skins):

Green weight = salted weight +10 %
Salted weight = green weight – 9 %

Dry salted weight = weight after predrying and subsequent salting or vice versa.

Water content of hides and skins 15 – 25 %.

Cattle hides
Calf skins
Sheep, goat skins
} = 40 – 45 % loss in weight of green weight.

Dry weight = weight after curing by drying.

Water content of hides and skins 12 – 20 %.

Hides and skins = 55 – 65 % loss in weight of green weight.

Soaked weight = weight of hide or skin after proper wetting back and draining.

Of salted hides and skins, minimum 100 % (up to 110 % possible) of green weight.
Of dried hides and skins 90 – 100 % of green weight.

Pelt weight = weight of hide or skin after all beamhouse operations, i. e. after removal of skin components which do not yield leather.

Water content of pelts 70 – 85 %.

Pelt weight obtained from
green weight = 70 – 95 %
salted weight = 90 – 120 %
dry salted weight = 140 – 160 %
dry weight = – 240 %

Tanned weight = weight of hide or skin after completion of tannage and after horsing up for at least 12 hours.
Water content of leather 70 – 85 %.

Setting out weight = weight of hide or skin after treatment on the setting out machine.
Water content of leather 50 – 70 %.

Sammed weight = weight of hide or skin after treatment on the samming machine.
Water content of leather 40 – 50 %.

Shaved weight = weight of hide or skin after shaving to the thickness desired.
Water content of leather 35 – 45 %.

Leather dry weight = weight of leather after drying, i. e. after completion of all wet processes.
Water content of leather 8 – 20 %.

Conversion factors for various curing stages of hides and skins

(According to UNFAO, Rome, for the OECD region)

Green:	salted	= 1 : 0.85
Green:	dry-salted	= 1 : 0.55
Green:	dry	= 1 : 0.35
Green:	pickled	= 1 : 0.65
Salted:	green	= 1 : 1.2
Salted:	dry-salted	= 1 : 0.65
Salted:	dry	= 1 : 0.4
Salted:	pickled	= 1 : 0.8
Dry-salted:	green	= 1 : 1.85
Dry-salted:	salted	= 1 : 1.5
Dry-salted:	dry	= 1 : 0.8
Dry-salted:	pickled	= 1 : 1.2
Dry:	green	= 1 : 2.85
Dry:	salted	= 1 : 2.5
Dry:	dry-salted	= 1 : 1.3
Dry:	pickled	= 1 : 2.0
Pickled:	green	= 1 : 1.55
Pickled:	salted	= 1 : 1.25
Pickled:	dry-salted	= 1 : 0.8
Pickled:	dry	= 1 : 0.5

Area and weight yields of some types of raw hides

1 kg salted weight of:

• U.S. Packers	(50/60 lbs)	= 0.158 m^2 = 1.69 sq. ft
• Argent. cattle hides	(14/16 kg)	= 0.141 m^2 = 1.51 sq. ft
• Scand. cattle hides	(17/24 kg)	= 0.185 m^2 = 1.98 sq. ft
• Cows/Central Europe	(30/39.5 kg)	= 0.154 m^2 = 1.65 sq. ft
• Bulls/Central Europe	(30/39.5 kg)	= 0.122 m^2 = 1.31 sq. ft

The yield can be determined only when processing large batches of hides or skins.

The yield is decisively dependent on the class of raw hide or skin, the weight class and the country of origin.

No generally applicable figures can therefore be given.

Area yield of various types of finished leathers

1 kg finished weight of (cattle hide)	Leather thickness	Leather area ca.
• Nappa clothing leather	1.0 mm	= 1.7 m^2
• Furniture upholstery leather	1.2 mm	= 1.5 m^2
• Automotive leather	1.2 mm	= 1.5 m^2
• Corrected grain side leather	1.5 mm	= 0.8 m^2
• Softy leather	1.9 mm	= 0.6 m^2
• Box side (black)	1.5 mm	= 0.8 m^2
• Sports box	2.2 mm	= 0.5 m^2

Area yield is largely dependent on structure of hide, tannage, retannage, fatliquoring and finishing.

Leather production costs

The percentages indicated should be considered only as approximate figures, as the rawstock prices are subject to considerable fluctuations, depending on availability and market conditions. Moreover, the wage costs as well as the costs of chemicals differ largely in the individual countries.

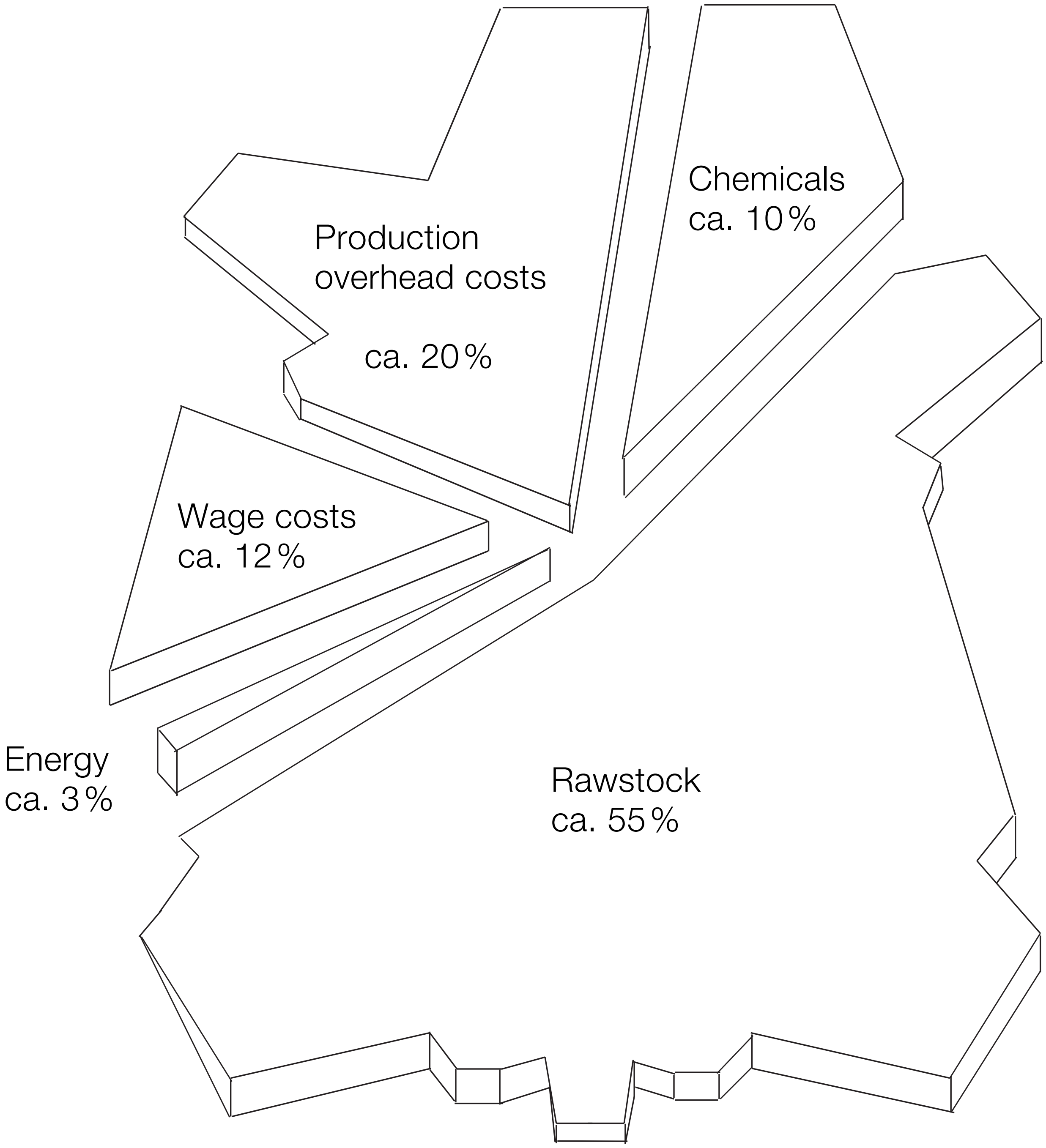

Materials required for the production of various types of leather

1. Products for the wet processes

(approximate amounts required in kilogram)

	Upper leather, cattle hide per 100 kg salted weight	Sole leather, cattle hide per 100 kg salted weight	Nappa leather, lamb skin per 100 kg dry weight
Soaking agents (e. g. Mollescal BW)	0.1 – 0.3	0.1 – 0.3	0.5 –1.5
Liming chemicals (Na_2S, Mollescal SF, NaSH)	3.0 – 5.0	3.0 – 5.0	6.0 –10.0
(hydrated lime)	2.0 – 6.0	1.0 – 3.0	6.0 –10.0
Deliming agents (e. g. Decaltal types)	1.0 – 3.0	1.0 – 2.0	2.0 – 5.0
Bating agents (e. g. Basozym 1000)	0.5 –1.5	–	1.0 – 3.0
Chrome tanning agents (e. g. Chromitan types)	5.0 –10.0	–	8.0 –15.0
Vegetable tanning materials (e. g. mimosa)	1.0 – 5.0	20.0 – 40.0	3.0 – 5.0
Synthetic tanning agents (e. g. Basyntan types)	1.0 – 5.0	5.0 –15.0	5.0 –15.0
Neutralizing agents (e. g. Neutrigan)	0.5 – 2.0	–	1.5 – 4.0
Wetting agents (e. g. Eusapon S)	0.2 – 0.5	–	1.5 – 6.0
Fatliquors (e. g. Lipoderm Liquor types)	2.0 – 8.0	0.5 –1.5	3.0 –10.0
Dyes (e. g. Luganil types)	0.5 – 3.0	–	1.0 – 6.0

The amounts required are largely dependent on the rawstock, the processing method in the individual tanneries and the type of processing vessels used (paddle, drum, mixer, Y-drum).

2. Finishing products

(Approximate amounts required in g per m^2 leather)

Products	Full grain leather			Correct. grain side	Splits
	aniline	semi-aniline	pigmented		
Pigments (e.g. Lepton Colours N)	0– 3	5–20	20–40	20– 50	30– 60
Aniline dyes (e.g. Eukesolar Dyes 150 Liquid)	20–40	10–20	5–10	0– 10	0– 5
Binders (e.g. Astacin Finish and Corial, Lepton Binder types)	5–30	10–50	40–80	80–120	140–240
Auxiliaries (e.g., waxes, modifiers, and flow improvers)	5–20	10–30	10–40	20– 40	20– 40
Top coating emulsions (e.g. Corial EM Finish)	20–60	20–60	20–60	30– 60	30– 60
Waster based top coats (Astacin/Lepton Top and Astacin/Lepton Matting ranges)	20–60	20–60	20–60	30– 60	30– 60
Organic solvents	0–10	0–30	0–30	0– 80	0– 40

The amounts required are largely dependent on the finishing technique, the desired degree of pigmentation as well as on the requirements imposed regarding appearance, surface handle and physical properties.

Safety and environmental protection

Safety Data Sheets

Since around 1975, the safety data sheet has been the medium by which manufacturers of chemicals for industrial use have informed their customers on the safe handling of chemicals and the hazards that they pose in practice.

Safety Data Sheets - Historical development

1975 Issued on a **voluntary** basis for **dyes** and **pigments**
(on initiative of ETAD)

1977 Issued for **auxiliaries**
(on initiative of VCI, TEGEWA, etc.)

1983 DIN 52900

1991 EU Directive 91/155 EEC (for preparations)
Contents of Safety Data Sheets standardized

1993 EU Directive 93/112 EEC (Directive 91/155/EEC extended to include substances)

2001 EU Directive 01/58 EEC (contents of MSDS)

EC Material Safety Data Sheets (EC-MSDS) are mandatory for all that require classification products with effect from 1 July 1993.

It has been standard practice at BASF for many years to issue safety data sheets according to this standard for every single product, irrespective of whether or not it requires classification.
According to the legal requirements in EC every customer is automatically sent a safety data sheet the first time a product is ordered. In a period of one year customers are automatically sent the latest version whenever amendments are necessary because of new findings, etc.
In other countries following other chemical legislation as EC the form of the safety data sheet is following other legal rules.
In the last years the international harmonisation efforts bring these countries specifics more and more closely together.
For that reason we give above some overview only for the EC-MSDS.
For self-understanding reason the different countries still have the requirements to have the MSDS available in the country-specific language.

The data contained in the EC-MSDS give information on the safe handling of products, hazardous ingredients and carriage recommendations, as well as on the chemical, physical, toxicological and ecological properties of products, and the resultant classification and labelling. It has to be made available in the language of the EU member in question.

Structure of the EC-MSDS

1. Substance/preparation and company name, intended use
2. Composition/information on hazard ingredients
3. Possible hazards
4. First aid measures
5. Fire-fighting measures
6. Accidental release measures
7. Handling and storage
8. Exposure controls and personal protection
9. Physical and chemical properties
10. Stability and reactivity
11. Toxicological information
12. Ecological information
13. Disposal considerations
14. Transport information
15. Regulatory information (labelling)
16. Other information

The most important information presented in each individual section is summarized below. More detailed information is contained in EU Directive 2001/58/EEC.

The main purpose of **Sections 1** and **2** is to identify the product in question. They contain information on the product name, chemical nature, the address of the company and an emergency telephone number and the intended use. It is not necessary to list all of the ingredients of preparations and their concentrations, but it is obligatory to list hazardous ingredients if they exceed the concentrations specified in the EU Preparations Directive (1999/45/EEC) and components which have official working-place-hazard-limits.

Sections 3 to **8** contain information on the potential hazards that can be posed to man and the environment on exposure to the product in question under various conditions and safety instructions.
- Recommended extinguishants and unsuitable extinguishants.
- Toxic combustion products formed in the case of fire.
- Technical precautions to be taken during handling and storage, such as avoiding electrostatic discharges, preventing dust from being raised, etc.
- General principles of industrial hygiene and, if necessary, personal equipment (protective clothing, respirators, etc.) required to minimize exposure.

Sections 9 –12 contain the physical and chemical data used to assess products on the basis of their reactivity and stability under different storage conditions, their toxic effects on mammals, and their effects in water, soil and air. These data form the basis for the information presented in Sections 3 - 8 and 13 - 15.

Section 13 contains information on suitable methods of disposal or recycling.

Section 14 contains comprehensive information on carriage regulations. It covers the various classes and divisions of dangerous goods, codes for transport by road and rail, UN numbers, technical designations and information relating to carriage by parcel post and express goods services, etc.

Section 15 contains information on **labelling**. Labelling is a concise means of presenting important information required to ensure safe handling. Substances are labelled according to Annex VI of EU Directive 67/548/EEC and preparations according to 1999/45/EEC. The labelling usually takes the form of **hazard symbols, hazard warnings, risk phrases** (R phrases) and **safety phrases** (S phrases).

The classification and labelling of hazardous preparations is based either on available data, component (i.e. substance) data or calculation “% proportion of hazardous substances contained in the preparation”.
It is important to ensure that the labelling refers exclusively to the potential hazards posed by the product in question, and recommendations designed to guarantee safe handling. The labelling does not constitute a risk assessment (see “Interpretation of data contained in EC-MSDS”).
Section 15 can also contain details required by national legislation. For instance, EC-MSDS issued in Germany contain details required by water conservation legislation (Wassergefährdungsklasse).

Section 16 can contain other information relevant to safety and occupational health which is not covered by the other sections, such as:
- Sources of the most important data used to compile the safety data sheet
- Suggested reading (technical information leaflets, publications, etc.)

Classification “Dangerous for the environment”

Directive 91 /325/EEC and 1999/45/EEC stipulate that substances and preparations are classified according to ecological criteria.

The hazard classification “dangerous for the environment” has been in use for some time in the case of substances.

Due to the revision of the EU Dangerous Preparations Directive the hazard classification “Dangerous for the environment” has now been extended to include preparations. As this classification is new for preparations in the leather industry BASF normally only sell preparations according to chem-law-definition. A short overview will be given for that issue.

The potential effects of chemicals on the environment are assessed according to their acute toxicity to fish, daphnia and algae, their removal from waste water (by biotic and/or abiotic means), their potential for bioaccumulation and their chronic toxicity to aquatic life. Data that are relevant for classification purposes are listed in Section 12 of the safety data sheet. Products are rated according to the hazards posed to the environment on the basis of adverse effect levels in the same way that they are classified according to their acute toxicity in mammals.

The evaluation of the health and environmental hazards of a preparation can be assessed in analogue to the acute toxicity either by a calculation method based on the concentration(s) in the preparation of any components(s) that are hazardous or based on tests carried out on the preparation itself. If test results are available for the preparation then the hazard classification based on these results has priority over calculation methods.

The hazard symbol “N”, the dead fish and dead tree pictogram, the hazard warning “Dangerous for the environment” and the risk phrases R 50/51/52/53 are used to label substances according to **environmental hazards**. Substances and preparations are classified in six different categories which are designated by risk phrases. Substances allocated to categories I to III have to be labelled with the hazard symbol “N” and the pictogram. Substances in categories IV to VI only need to be labelled with the appropriate risk phrases.

Apart from data relevant to the “Dangerous for the environment” classification Section 12 of our EC-MSDS can contain other information such as:

- The effects of the substance in question on **waste-water bacteria** and its **behaviour in effluent treatment plants;**
- An assessment of the quality of the waste water in terms of its **chemical oxygen demand** and **biochemical oxygen demand** (COD, BOD); and
- the possibility of contamination of the waste water with **AOX** and **heavy metals** as indicated by the product's organic halogen content and heavy metal content. (It must be borne in mind that this information always refers to the product itself. The actual level of contamination, especially with products that are incorporated into the leather substrate during processing is much lower in practice.)

The labelling required on account of the product in question being classified as “Dangerous for the environment” is given in Section 15.

Interpretation of data contained in EC-MSDS

EC-MSDS contain information and recommendations that are designed to make it possible to handle chemical products safely. This requires extensive experimental work which consumes a great deal of time effort and money. In safety data sheets, the results of this work are presented in condensed form, and this can lead to misinterpretation. The greatest scope for misinterpretation is in the area of toxicology (Section 11). This is discussed below.

It is rarely the case that the toxicology of chemical products can be evaluated from direct experience of their effects in man, and so animal experiments have to be used instead. Strict legal controls apply to these experiments. The design of experiments and methodology are laid down in detail, they are subject to an extensive licensing system and they are monitored continuously. Products are assessed according to their acute oral toxicity, irritation to the skin and mucous membranes, mutagenic, teratogenic and carcinogenic effects and the effects of repeated or prolonged exposure. The results form the criteria by which products are **classified**, and they are taken into consideration together with other data to determine the product's **labelling** (Section 15).

Labelling is a means of drawing the user's attention to **potential hazards**, informing the user of recommendations for safe usage and warning the user against improper use. The potential hazards posed by a product are often confused with the real **risk** that it poses. For instance, a product that is labelled is not necessarily harmful if it is used properly. Labelling a product as harmful means that the product is only harmful if the user is exposed to it in a particular way.

The **risk** posed to man and the environment can be assessed from the **potential hazard x exposure.**

The **potential hazard** posed by a product is a constant factor. The level of **exposure** is variable and this determines the overall risk. The **exposure** to a product is governed by the **quantity** administered, the **length** of time for which it is administered, the **route** by which it is applied, etc. The user can be protected from the full potential hazards posed by a chemical by limiting the extent to which he is exposed to it. With **dangerous substances**, a variety of **regulations** have to be observed, such as occupational exposure limits, health and safety regulations, safety factors, and restrictions or total bans on the use of products.

This implies that hazardous products are safe to use if they are handled properly and if the recommended safety precautions are followed.

The impact of chemical products on the environment can only be assessed full by considering the actual quantities entering the environment and these figures are dependent on local and regional conditions. It is, therefore, essential that end-users and local authorities have access to all the relevant product data standing in section 16. In order to support personnel involved in such environmental work the manufacturer must make the data available in a readily understandable form. Emphasis is placed here on the communication of data by means of a safety data sheet containing all relevant data.

Regulations concerning the transportation of materials classified as dangerous goods

Road/Rail	GGVE/GGVS	Gefahrgutverordnung Eisenbahn/Straße
	RID*/ADR	Règlement international concernant le transport des marchandises dangereuses par chemin de fer/Accord européen relatif au transport international des marchandises par route.
Waterway	IMDG**	International maritime dangerous goods code
	ADN/ADNR	Inland waterway transport
Air	ICAO/IATA**	

Class 1: Explosives and articles containing explosives

Class 2: Compressed, liquefied or dissolved gases under pressure

Class 3: Inflammable, liquid materials (combustible liquids)

Class 4.1: Inflammable materials
Class 4.2: Spontaneously combustible materials
Class 4.3: Materials developing inflammable gases when wet

Class 5.1: Oxidizing materials
Class 5.2: Organic peroxides

Class 6.1: Toxic materials
Class 6.2: Nauseating or infectious substances

Class 7: Radioactive substances

Class 8: Corrosive substances

Class 9: Other dangerous substances and articles

* http://www.otif.org
** http:/www.hazmathelp.com

Danger symbols – marking according to the Regulation on Dangerous Goods (GefStoffV)

Xi

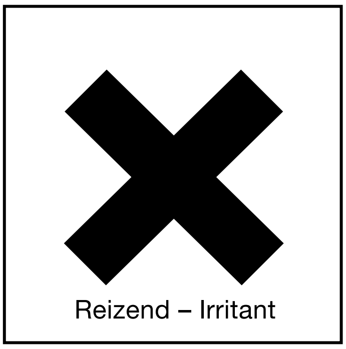

Irritant

also for

Sensitising ←

Chronically damaging →

Xn

Harmful to health

T

Toxic

Carcinogenic

←

Mutagenic

T+

Very toxic

O

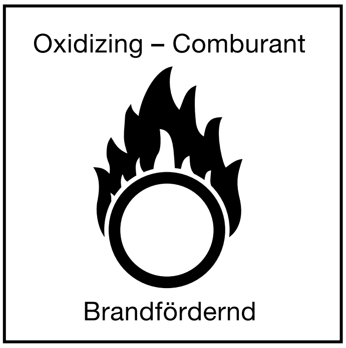

Oxidizing

F

Highly inflammable

F+

Extremely inflammable

C

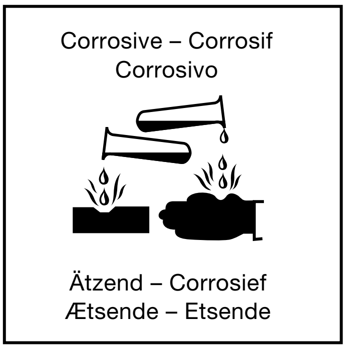

Corrosive

E

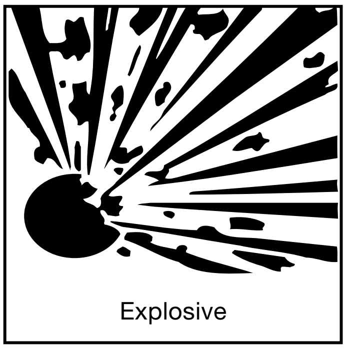

Explosive

N

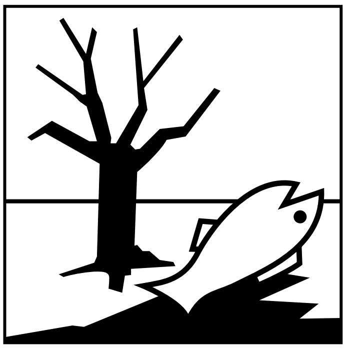

Environmentally hazardous

Danger labels prescribed by IMDG Code

(International maritime dangerous goods code)
Marking according to the Regulation on Dangerous Goods.

Explosive
Orange

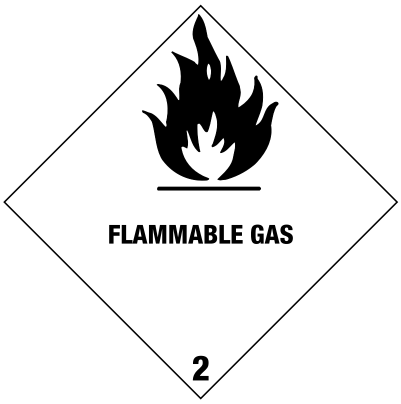

Flammable Gas
Red

Poison Gas
White

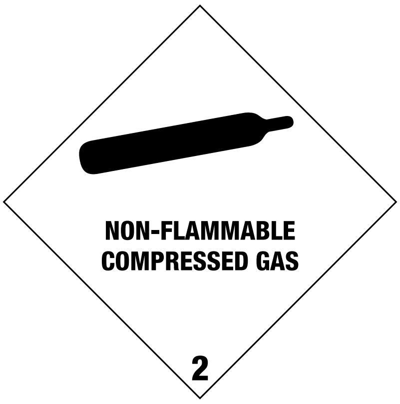

Non-flammable
compressed gas
Green

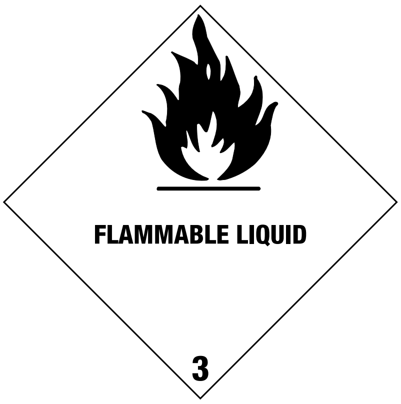

Flammable
liquid
Red

Flammable solid
Red,
vertical stripes

Spontaneously
combustible
Red, lower half

Dangerous
when wet
Blue

Poison
White

Danger labels prescribed by IMDG Code

(International maritime dangerous goods code)
Marking according to the Regulation on Dangerous Goods.

Harmful

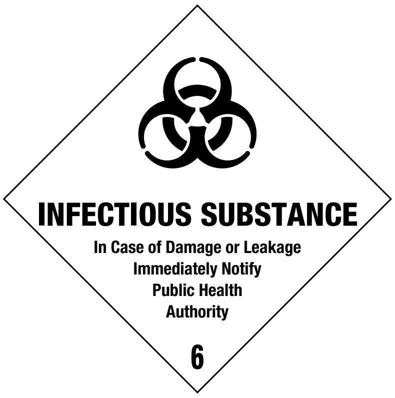

Infectious
substance

Oxidizing agent
Yellow

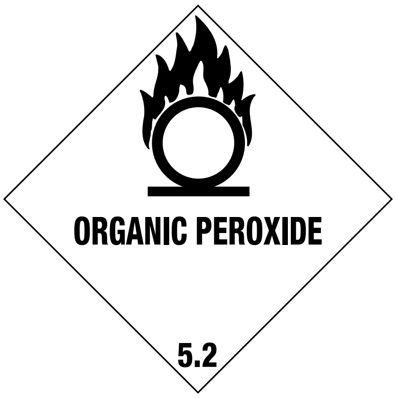

Organic peroxide
Yellow

Radioactive I
White

Radioactive II
White

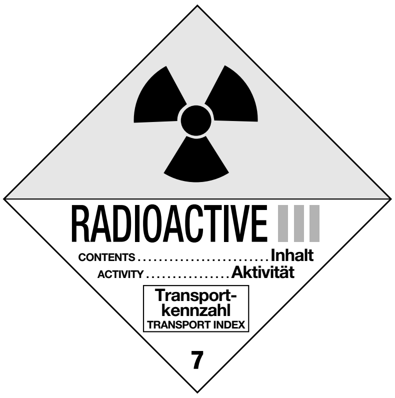

Radioactive III
White

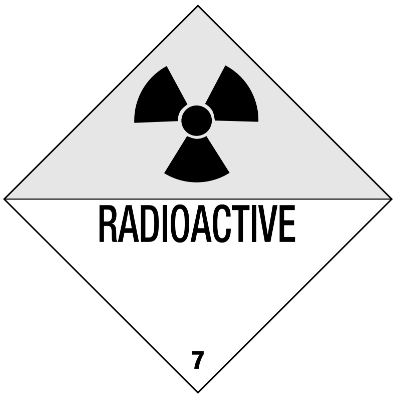

Radioactive Yellow,
upper half

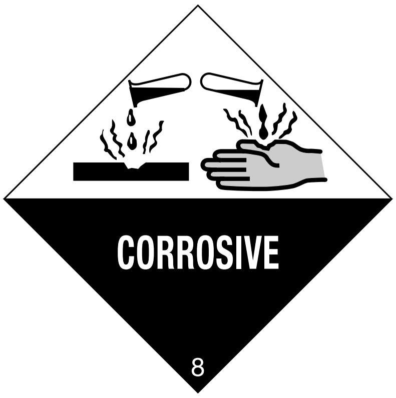

Corrosive
Black, lower half

Some basic terms concerning the safe handling of chemicals

Dose (D)

Measured or prescribed amount of a substance.
Some common abbreviations:

D_{tox}	toxic dose
DE	efficient dose
DL (LD)	lethal dose
ID	individual dose
IMD	individual maximum dose
MD	maximum dose
MDD	maximum daily dose
ND	normal dose
DD	daily dose
MDD	maximum daily dose

The lethal dose is subdivided into:

LD_{100}	the absolutely lethal dose
LD_{50}	the average lethal dose, at which 50 % of the animals in the experiment are killed
LD_0	the maximum non-lethal dose.

Flash Point

DIN 53169
The flash point is the lowest temperature, at a pressure of 1013.25 mbar, at which vapours are developed from the specimen under the conditions of this standard in such quantities that they form together with air over the liquid level a mixture that can be inflamed by foreign ignition.

MAK

The MAK value (maximale Arbeitsplatz-Konzentration) is the maximum allowable concentration in the workplace of a working material in the form of gas, vapour, or air-suspended matter which, according to our present state of knowledge, generally does not impair the health of the workers and does not inconvenience them unduly, not even on repeated and prolonged exposure for normally 8 hours daily under the condition of a weekly working time of up to 45 hours. As a rule, the MAK value is integrated as an average value over periods of up to one working day or one work shift. In establishing MAK values, the main consideration is the characteristic effects of the materials, but as far as possible consideration is also given to the practical conditions of the working processes or of the resultant exposure pattern. What finally matters is the scientifically based criteria of industrial hygiene, and not the technical and economical possibilities of implementation in industrial practice.

Safety labels

Drums, containers etc. containing hazardous products must be marked with specific labels that make it possible to classify the product at one glance.

Toxicity

The degree of being poisonous.
Subdivided in
a. acute toxicity = poisoning produced by a single dose
b. subchronical toxicity = poisoning produced by repeated dosage within a relatively short time
c. chronical toxicity = poisoning produced by repeated dosage over a relatively long time.

Environmental protection

Environmental protection starts with the selection of environmentally friendly products and processes and continues with an appropriate treatment of waste water and airborne emissions.

Selection of environmentally friendly products and processes in leather production	
Soaking	• Fresh raw hides free of salt (green hides) • Biodegradable surfactants
Liming	• Low sulfide and sulfide-free liming processes • Hair saving processes • Recycling of spent liquor
Deliming	• Low ammonium and ammonium-free deliming processes
Bating	• Low ammonium and ammonium-free bating processes
Pickling	• Low salt and salt-free pickling processes
Tannage	• Recycling of residual chromium in spent tanning liquor from wet blue production • Improved chrome exhaustion and fixation • Pretanning and shaving of the pretanned pelts • Alternative tanning techniques without chromium
Retannage	• Retanning agents with high exhaustion • Polymeric tanning agents • Low-phenol and low-formaldehyde syntans • Low-salt liquid retanning agents • Low-formaldehyde resin tanning agents • Aldehyde tanning agents
Dyeing	• Dedusted powder dyes • Liquid dyes • Fixing agents • Dyeing auxiliaries
Fatliquoring	• AOX-free fatliquors • Polymeric fatliquors with high exhaustion
Water repellent treatment	• Water repellents that do not need to be fixed with metal salts
Finishing	• Aqueous finishing systems • Pigment preparations free of heavy metals

Legislation

Different approaches are taken to environmental legislation in different states, and legislation is applied to different phenomena. This makes it very difficult to draw direct comparisons between the legislation that applies to different countries. Further more environmental legislation is subject to continual amendment. It is not the aim of this booklet to describe environmental legislation world wide and list limits in waste water and airborne emissions. The following is just an overview on what has to be taken into account on responsible handling of tannery emissions.

In tanneries all over the world the waste water is nowadays treated in effluent treatment plants. The following steps are generally run through, although they may be arranged in a different order, or repeated several times, or combined differently according to the requirements.

Waste water treatment (flow chart)

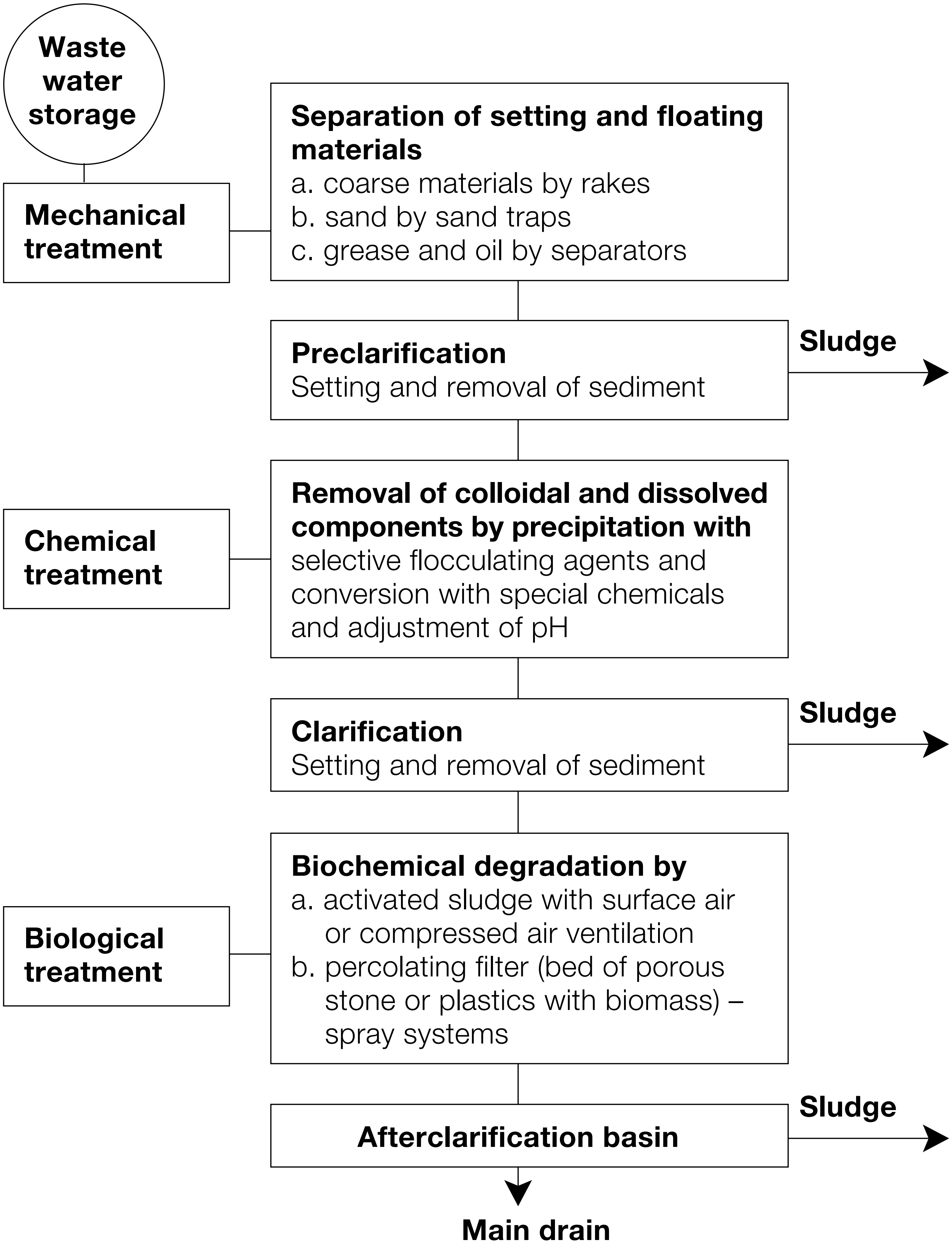

Water-polluting substances

Water pollutants are solid, liquid and gaseous substances which are capable of changing the physical, chemical or biological conditions of waters to a lasting extent.

In Germany for example, installations for storing, filling and treating water-polluting substances and installations using water-pollutants in industry and public facilities have to be so constructed that waters are neither polluted nor lastingly changed in their properties (German Water Conservation Law, paragraph 19 g).

The German ministry responsible for the protection of environment and nature and for reactor safety has classified the pollutants according to their potential hazard in a catalogue (published 9 March 1990).

Classification of water pollutants in 4 classes:

Class 3: strongly water-polluting substances
Class 2: water-polluting substances
Class 1: weakly water-polluting substances
Class 0: substances which generally have no water-polluting effect

The assessment of the water-polluting potential is based on the specific properties of the substances:

- acute toxicity on mammals,
- aquatic toxicity on fishes, dolphins, algae and bacteria,
- biological degradability (hydrolysis, photolysis, oxidation, etc.),
- soil mobility,
- ability to accumulate biologically,
- carcinogenic effect,
- mutagenic effect,
- teratogenic effect.

Producers of preparations can classify their products according to their own material specifications.

Types of sludge and treatment

Primary sludge	Solids which are directly separated from the waste water (coarse and fine sludge, containing hide and skin fibres, hairs and hair particles, shavings, waste leather, lime, reaction products, e.g. chemicals, tanning agents, and fatty materials). 3 – 5 m^3 of primary sludge per ton of processed raw hide or skin with ca. 5 % of dry substance.
Secondary sludge	Flocculant sediments (fine sludge), obtained after chemical or biological treatment; 1 – 2 % of dry substance.

Methods of treatment (dewatering)

1. Thickening (mechanical settling).

2. Putrefaction with exclusion of air in digestion towers (for 20 – 30 days at ca. 33 °C). Organic components are largely decomposed with formation of methane gas.

3. Drying by heating (drum kiln).

4. Mechanical dewatering after conditioning with pressure filters (chamber filter presses) vacuum filters/suction cell filters, sieves (gravel filters) and centrifugal hydroextractors.

Disposal of sludge and solid wastes

1. Disposal on dumping sites permitted only for solid or solidified materials that involve no hygienic hazard. The materials must not burn, dust, or form objectionable odours, and they must contain no components that can be dissolved by rain water.

2. Combustion of waste materials at high oven temperature and with ensurance of waste gas purity.

3. Composting: Suitable for waste mixtures with a carbon: nitrogen ratio of 20 – 30:1. (Optimum solution for maintenance of natural material balance).

Leather processing: Wastes/Leather substance

1. Wastes

Calculated on 100 % weight of salted raw skin:

Fleshings for glue	14 – 16 %
Trimmings for glue	14 – 18 %
Sewage sludge (soluble proteins, solubilized hair)	12 – 16 %
Hair (recovered from hairsaving liming processes)	0 – 15 %

If green hides are used please note that the values have to be about 15 % higher.

Calculated on 100 % weight of wet blue

Shavings	approx. 5 %
Shaved Trimmings	approx. 15 %

2. Leather substance (Calculated on 100% weight of wet blue)

Grain split	47 – 50 %
Flesh split	approx. 40 %

Recovery of wastes

1. Wool γ Textile mills
   Hair, bristles γ Production of felts, carpets, non-wovens, brushes.
2. Split offal and Trimmings for glue γ Gelatine, sausage skins, protein powder, medical and surgical film and fabric substrates.
3. Machine offal for glue γ Glue, fodder, fertilizers.
4. Shavings, leather Trimmings γ Leatherboard, non-wovens, synthetic leatherlike materials, chemical auxiliaries, fodder, fertilizers.

Percentage of effluents obtained in various processes

(Calculated on total waste water in normal working method)

Soaking, liming, rinsing	ca. 30 – 40
Deliming, bating, rinsing	ca. 15 – 20
Pickling, chrome tanning	ca. 5 – 10
Vegetable-synthetic tanning	ca. 20 – 25
Neutralizing, dyeing, fatliquoring	ca. 15 – 20
Samming, pasting, cleaning	ca. 2 – 7
General waste water	ca. 2 – 5

Regulations concerning substances contained in effluents from tanneries

– Requirements and treatments –

The regulations governing the quality of effluents discharged from tanneries differ from one country to another. The restrictions are more or less stringent, depending on the local conditions and whether the effluents are discharged into a main drain direct or indirect, i.e. first into a public waste water or central treating plant. Samples of the effluents for testing are taken at the point at which the effluents are discharged into the public sewer, or from the main drain.
The following table offers methods of adjusting the most important effluent parameters.

Regulations concerning direct or indirect discharge of effluents:

	Measure
Temperature	Adjust temperature.
pH value	If necessary, add acid or alkali for neutralization.
Settling substances	Cut down the amount by mechanical separation, addition of flocculating agents (aluminium or iron sulfates or chlorides) and addition of sedimentation agents (Sedipur types).
Substances extractable with petroleum ether (biologically not degradable)	Removal of fats and oils by separator.
Toxic substances	Biological degradation must not be disturbed by toxic organic compounds. (A 1:5 dilution of the effluent must not have a toxic effect in the fish test.)
COD / BOD	Cut down oxygen demand by flocculation, sedimentation and biological degradation. Omit use of oxygen-demanding substances.
Ammonia/nitrogen	Use hair saving liming processes and nitrogen-free products (particularly in deliming).
Aluminium	Flocculate out of residual and wash liquors.
Chromium-III-compounds	Flocculate chromium salts out of residual and rinsing liquors; recirculate residual liquors; fix chromium salts in the leather; use chrome tanning process with extensive exhaustion of residual liquors.
Chromium-VI-compounds	Do not use chromium-VI- compounds; use no oxidizing agents in beamhouse processes.
Phenol	Use products with lowest content of free phenol.

Sulfide	Use sulfide-free liming chemicals; use catalytic oxidizing agents (manganese sulfate, manganese chloride); recirculate residual liming liquors. Recover sulfides by acidifying residual liquors and running all of the hydrogen sulfide formed into caustic soda.
Sulfite	Use less sulfite-containing products.
Sulfate	Use products with lower sulfate content in deliming or in the pickle Picaltal in place of sulfuric acid.
AOX	Use products that do not contain organic halogen compounds.

Airborne emissions

Airborne emissions are in many countries less strictly regulated than discharges in waste water. In Germany airborne emissions are covered by the “Technische Anleitung zur Reinhaltung der Luft” (TA Luft).
All countries have their own classification and limitation of hazardous substances that are released to air. No specific limits exist for the leather industry.

Emissions to air in the leather industry

Process	Substance	Avoidance
Wet end	Dust	• dedusted products • liquid products
Deliming/Bating	H_2S	• see below
Pretanning/Tanning/ Retanning	Glutaraldehyde	• automatic dosage systems • modified Glutaraldehyde with lower vapour pressure (e.g. Relugan GTP)
Finishing	VOC	• low VOC-systems • water-based systems

Hydrogen sulfide hazards in the leather industry

The use of sodium sulfide, sodium hydro sulfide and organic sulfides for the unhairing process is likely to cause development of hydrogen sulfide in tanneries.

Hydrogen sulfide (H_2S) is strongly poisonous. It has an irritating effect on the mucous membranes and moreover paralyses cell respiration and thus damages the nerves. Poisoning by this gas results in inflammation of the eyes, bronchial catarrh and inflammation of the lungs. Higher concentrations cause cramps, unconsciousness and eventually death due to respiratory paralysis.

Even at concentrations as low as 700 p.p.m. H_2S in the inhaled air, acute lethal poisoning may occur after a short time. In addition, hydrogen sulfide gas forms explosive mixtures with the air (explosion limits: 4.3 – 45.5 % by volume, ignition temperature 270 °C). Therefore, it is absolutely necessary to avoid ignition sources.

Measures to reduce the likelihood of gas development and contacting H_2S

1. Use low sulfide or sulfide free liming methods.

2. Wash limed pelts several times in long floats (200 %) to reduce sulfide content of pelts.

3. Incorporate sodium bisulfite in deliming to oxidize H_2S.

4. Wash thoroughly after deliming and bating.

5. Installation of ventilation and exhaust devices on drums and in workrooms.

6. Wear a protective mask when working at the drum.

7. Measure sodium sulfide concentration at the workplace and at the door of drums with the Dräger test tube for sodium sulfide 5/b. (Supplier: Drägerwerk AG, Lübeck)

Some basic terms used in environmental protection

Activated sludge process	Process for biological waste water treatment. The waste water is condensed to slimy flakes by extensive circulation and airing in a basin with addition of aerobic microbes (activated sludge), and the contaminations are biologically degraded by the micro-organisms.
Adaptation	In biology, this term means the adjustment of organisms to an unknown substance or to environmental conditions (e.g. for micro-organisms, the possibility of degrading a hitherto unutilizable substance).
AOX	Adsorbable organically bound halogen
Biochemical oxygen demand (BOD)	Measure of the content of organic substances in the waste water which are biologically degradable with consumption of oxygen. Usually indicated as 5-day biochemical oxygen demand (BOD_5). This is the amount of oxygen in milligrams per litre (mg O_2/l) that is consumed by micro-organisms in 5 days at 20 °C for oxidation of the biologically degradable substances contained in the water. It is determined by a. the dilution method b. the vibration method (respirometric method).
BSB	Biologischer Sauerstoffbedarf, the German term for BOD.
Chemical oxygen demand (COD)	System of measuring the content of organic impurities with oxidizing agents. The consumption of oxygen in milligrams per litre (mg O_2/l) is indicated. Determined with a. potassium permanganate or with b. potassium dichromate.

Controlled dumping site	Controlled and supervised dumping site for waste materials.
CSB	Chemischer Sauerstoffbedarf, the German term for COD.
Degradability	The degree of biological or chemical decomposition of organic compounds based mainly on metabolism processes of micro-organisms.
Denitrification	The reduction of nitrates or nitrites to nitrogen oxides, ammonia, and free nitrogen by certain micro-organisms.
Dust	Solid aerosol with a particle size smaller than 200×10^{-3} mm. We distinguish between metallic, mineral, vegetable, animal, artificial, and radioactive dust according to its origin. Dust forms an essential part of air pollution (emissions, immissions).
Einwohnergleichwert (EWG)	The number of human beings producing a daily amount of waste water whose BOD_5 corresponds to the daily production of waste water in industry (54 g BOD_5 a day = 1 EWG).
Emissions	The gaseous, liquid, or solid substances emitted by a plant or a technical process into the atmosphere; noise, vibrations, light rays, heat and radioactive effects, as well as liquid and solid substances that penetrate, not into the atmosphere, but into other environments.
Immission	Action of foreign substances in the air, noises or vibrations on human beings, animals, or plants.
Immission value (I value)	Maximum value laid down for immissions. The immission values are a standardized system laid down in TA Air. I value 1: long-time action value I value 2: short-time action value.

Instigator responsibility principle	Principle applying to all producers and consumers in all environmental connections: the instigator responsible must bear the costs resulting from his pollution-causing behaviour.
Load value	Term used in waste water levy law. Known in the most recent version as Schadeinheit (SE) or damage unit.
Main drain	Drain into which waste water from dewatering operations is discharged direct.
Nitrification	Microbial oxidation of ammonia to nitrate.
Pollution	Common term for environmental contamination.
Recycling	Re-use of end, intermediate, or by-products obtained in industrial production processes in a subsequent production cycle.
Settling basin	Basin in which a sedimentation of the settling substances is effected by slowing down the flow rate.
Settling substances	Solids that settle in water within a certain time.
Suspended matter	Solids that are suspended in water (or in some other medium) because they have the same, or almost the same, density.
TA	Abbreviation for Technische Anleitung, administrative regulations issued by the government of the Federal Republic of Germany regarding plants requiring official approval. Legally based on the German Federal Immission Protection Law.

TOC	Total organic carbon, name of a newer COD determination method. Based on complete combustion of organic carbon compounds 1 mg C + 2.67 mg O_2 γ 3.67 mg CO_2
TOD	Total oxygen demand. Determined by complete thermal conversion in enclosed system. Difference between O_2 content of the air before and after combustion.
VOC	Volatile organic carbon.
Waste water	According to DIN 4045 “water that has changed, and in particular become contaminated, after household or industrial use and then discharged; also water from precipitations flowing into sewage systems”.

Standard physical units

SI base units

(SI = Système International d'Unités)

Basic quantity	SI base unit	
	Name	Symbol
Length	metre	m
Mass	kilogram	kg
Time	second	s
Electric current	ampere	A
Temperature (thermodynamic or temperature difference)	kelvin	K
Amount of substance	mole	mol
Luminous intensity	candela	cd

Definition of SI base units

• metre	The metre is the length equal to 1 650 763.73 wavelength in vacuum of the radiation corresponding to the transition between the levels 2 p_{10} and 5 d_5 of the krypton-86 atom.
• kilogram	The kilogram is the unit of mass; it is equal to the mass of the international prototype of the kilogram.
• second	The second is the duration of 9 192 631 770 periods of the radiation corresponding to the transition between the two hyperfine levels of the ground state of the caesium-133 atom.
• ampere	The ampere is that constant current which, if maintained in two straight parallel conductors of infinite length, of negligible circular cross-section, and placed one metre apart in vacuum, would produce between these conductors a force equal to $2 \cdot 10^{-7}$ newton per metre of length.
• kelvin	The kelvin, unit of thermodynamic temperature, is the fraction 1/273.16 of the thermodynamic temperature of the triple point of water.

• mole	The mole is the amount of substance of a system which contains as many elementary entities as there are atoms in 0.012 kilogram of carbon 12. When the mole is used, the elementary entities must be specified and may be atoms, molecules, ions, electrons, other particles, or specified groups of particles.
• candela	The candela is the luminous intensity, in the perpendicular direction, of a black body at the temperature of freezing platinum under a pressure of 101 325 newton per sqaure metre.

Decimal multiples and sub-multiples of SI units

(Internationally adopted prefixes)

Factor by which the unit is multiplied	Prefix	Symbol
10^{-18}	atto	a
10^{-15}	femto	f
10^{-12}	piko	p
10^{-9}	nano	n
10^{-6}	micro	μ
10^{-3}	milli	m
10^{-2}	centi	c
10^{-1}	deci	d
10	deca	da
10^{2}	hecto	h
10^{3}	kilo	k
10^{6}	mega	M
10^{9}	giga	G
10^{12}	tera	T
10^{15}	peta	P
10^{18}	exa	E

SI derived units with special names and symbols

Quantity	SI unit Name	 Symbol	Relationship
Plane angle	radian	rad	1 rad = 1 m/m
Solid angle	steradian	sr	1 sr = 1 m^2/m^2
Frequency of a periodic occurence	hertz	Hz	1 Hz = 1/s
Activity of a radioactive substance	becquerel	Bq	1 Bq = 1/s
Force	newton	N	1 N = 1 $kg \cdot m/s^2$
Pressure, mechanical stress	pascal	Pa	1 Pa = 1 N/m^2 = 1 $kg/m \cdot s^2$
Energy, work, quantity of heat	joule	J	1 J = 1 $N \cdot m$ = 1 $kg \cdot m^2/s^2$ = 1 Ws
Power, heat flow	watt	W	1 W = 1 J/s = 1 $N \cdot m/s$ = 1 VA
Energy dosage	grey	Gy	1 Gy = 1 J/kg = 1 m^2/s^2
Electric charge, quantity of electricity	coulomb	C	1 C = 1 $A \cdot s$
Electric potential, potential differences, electromotive force	volt	V	1 V = 1 J/C = 1 W/A

Quantity	SI unit		Relationship
	Name	Symbol	
Electric capacitance	farad	F	1 F = 1 C/V = 1 A · s/V
Electric resistance	ohm	K	1 K = 1 V/A = 1/S
Electric conductance	siemens	S	1 S = 1/K = 1 A/V
Magnetic flux	weber	Wb	1 Wb = 1 V · s
Magnetic flux density, magnetic induction	tesla	T	1 T = 1 Wb/m^2
Inductance, magnetic conductance	henry	H	1 H = 1 Wb/A = 1 V · s/A
Celsius temperature	degree Celsius	°C	*
Luminous flux	lumen	lm	1 lm = 1 cd · sr
Illuminance	lux	lx	1 lx = 1 lm/m^2

The SI derived units are expressed in terms of base units, either as a power of the base unit or as a compound unit formed by multiplication of two or more units.
Example: m^2 for area; kg · m/s^2 for force.
The SI derived units form a coherent system together with the base units and supplementary units. They include the multiples and submultiples of the base unit obtained by attaching a prefix.
Example: 1 J = 1 kg (m/s)^2 = 1 N m = · 1 W s for work.

* *The Celsius temperature t is equal to the difference* $t = T - T_0$ *between two thermodynamic temperatures T and* T_0 *where* $T_0 = 273.15$ *K.*

Units outside the SI with special names and symbols

Quantity	SI unit		Relationship
	Name	Symbol	
Plane angle	full angle	**	1 full angle = 2Θ rad
	gon	gon	1 gon = (Θ/200) rad = 90°/100
	degree	° *	1° = (Θ/180) rad
	minute	' *	1' = (1/60)° = (Θ/10800) rad
	second	" *	1" = (1/60)' = (Θ/648000) rad
Refractive power of optical systems	dioptre	dpt**	1 dpt** = 1/m
Area of ground and floor sections	are	a	1 a = 100 m^2
	hectare	ha	1 ha = 10^4 m^2
Volume	litre	l	1 l = 1 dm^3 = 10^{-3} m^3
Mass	tonne	t	1 t = 1000 kg
Mass in nuclear physics	atomic mass unit	u**	1 u = $1.66054 \cdot 10^{-27}$ kg
Mass of precious stones	metric carat	Kt**	1 Kt = $0.2 \cdot 10^{-3}$ kg = 0.2 g

Quantity		SI unit		Relationship
		Name	Symbol	
Linear density	textile fibres and yarns	tex	tex	1 tex = 10^{-6} kg/m = 1 g/km
		degree	Ø*	
Time		minute	min*	1 min = 60 s
		hour	h*	1 h = 60 min = 3600 s
		day	d*	1 d = 24 h = 86 400 s
		common year	a*	1 a = 365 d = 8760 h
Pressure	liquids, gases, steams	bar	bar	1 bar = 10^5 Pa = 10^5 N/m^2
Energy	nuclear physics	electron volt	eV	1 eV = $1.60218 \cdot 10^{-19}$ J

Units outside the SI are all units derived from the base units with a factor deviating from 1 (see above table under relationship).

Exceptions:	dioptre (1/m),	although coherent, not declared SI unit.
	kilogram (kg)	although with decimal prefix, the kilogram (kg) is not a unit outside the SI, because it is a base unit.

---

* *without prefix*

** *not internationally standardized*

Definitions of various derived units

Quantity	Symbol	Definition
Force	N	The newton is the force which, applied to the mass of 1 kilogram, gives it an acceleration of 1 m/s^2. The hitherto used kilogram-force is the force of 1 kg mass on a gravitational basis (standard acceleration). $g = 9.80665$ m/s^2
Pressure	Pa	The pascal is the pressure produced by a force of 1 N applied, uniformly distributed, over an area of 1 m^2.
	bar	1 bar = 10^5 Pa = 10^5 N/m^2
Mechanical stress	N/mm^2	One N/mm^2 is the stress exerted by a force of 1 N from a material cross-section of 1 mm^2.
Dynamic viscosity	Pa·s	The pascal second is equal to the dynamic viscosity of a homogeneous fluid in which, two layers 1 m apart, the top layer is moving parallel to the bottom layer at a velocity of 1 m/s, and a shearing stress of 1 Pa is required to maintain this motion.
Kinematic viscosity	m^2/s	The square metre/second is equal to the kinematic viscosity of a homogeneous fluid of 1 Pa · s and 1 kg/m^3 density.
Energy, work, quantity of heat	J	The joule is the work done when the point of application of a force of 1 N is displaced through a distance of 1 m in the direction of the force.
Power	W	The watt is equal to 1 J per second.

Conversion tables

Units of pressure

			Pa	kPa	MPa N/mm^2	bar
(1 N/m^2 =)	1 Pa	=	1	10^{-3}	10^{-6}	10^{-5}
	1 kPa	=	10^3	1	10^{-3}	10^{-2}
(1 N/mm^2 =)	1 MPa	=	10^6	10^3	1	10^1
(0.1 MPa =)	1 bar	=	10^5	10^2	10^{-1}	1

Units of mechanical stress

			Pa	N/mm^2
(1 N/m^2 =)	1 Pa	=	1	10^{-6}
(1 MPa =)	1 N/mm^2	=	10^6	1

Units of energy, work quantity of heat

			J	kJ	kWh
(= 1 Nm)	1 J = 1 Ws	=	1	10^{-3}	$2.78 \cdot 10^{-7}$
	1 kJ	=	10^3	1	$2.78 \cdot 10^{-4}$
	1 kWh	=	$3.60 \cdot 10^6$	$3.60 \cdot 10^3$	1

Units of power, energy flow, heat flow

			W	kW
(= 1 Nm/s = 1 J/s	1 W	=	1	10^{-3}
	1 kW	=	10^3	1

Conversion of some common units to equivalent values in SI units

Quantity	Exact equivalent		Rough approximation (max. 2 % deviation)
Force	1 kp	= 9.80665 N	
	1 p	= 0.00980665 N	1 kp Ξ 10 N
	1 dyn	= 10^{-5} N	
Pressure	1 at = 1kp/cm^2 = 0.980665 bar		1 at Ξ 1 bar
	1 atm	= 1.01325 bar	
	1 torr	= 1 mm Hg	1 torr Ξ 1.33 mbar
		= 1.33322 mbar	
	1 mWS	= 0.0980665 bar	1 mm WS Ξ 0.1 mbar
	1 mm WS	= 0.0980665 mbar	
Mechanical stress	1 kp/mm^2	= 9.80665 N/mm^2	1 kp/mm^2 Ξ 10 N/mm^2
	1 kp/cm^2	= 0.980665 N/mm^2	
Dynamic Viscosity	1 P (poise)	= 0.1 Pa·s	1 cP = 1 mm^2/s
	1 cP	= 1 mPa·s	
Kinematic Viscosity	1 St (stokes) = 10^{-4} m^2/s		1 cSt = 1 mm^2/s
Energy, work, quantity of heat	1 kpm	= 9.80665 J	1 kpm Ξ 10 J
	1 erg	= 10^{-7} J	
	1 kcal	= 4.1840 kJ	1 kcal Ξ 4.2 kJ
	1 kWh	= 3600 kJ	
Power	1 kpm/s	= 9.80665 W	1 kpm/s Ξ 10 W
	1 PS	= 735.49875 W	1 PS Ξ 0.74 kW
	1 kcal/h	= 1.1630 W	1 kcal/h Ξ 1.16 W

Units of length

Metric units of length

SI base unit = metre (m)

1 kilometre (km) = 10 hectometres (hm) = 1000 metres (m)
1 metre (m) = 10 decimetres (dm) = 100 centimetres (cm)
1 centimetre (cm) = 10 millimetres (mm)
1 millimetre (mm) = 1000 micrometres (µm)

Other units of length

1 German land mile = 7500 m
1 nautical mile = 1852 m
1 geographical mile = 7421.6 m
1 Faden (fathom) = 1.85 m

British and US units of length

1 yard (yd) = 0.9144 m
1 foot (ft) = 30.48 cm
1 inch (in) = 2.54 cm
1 fathom = 182.9 cm
1 London mile = 1524 m
1 mile (statute) = 1609 m
1 nautical mile = 1852 m

Conversion factors:

1 m = 1.0936 yd = 3.28 ft = 39.37 in
1 mm = 0.03937 in

Conversion table – metres and yards

yards β ⌇ ⌇ ⌇ ⌇ ⌇		metres (m) yards ⌇ ⌇ ⌇ ⌇ ⌇ γ		metres (m)
1.094	=	1	=	0.91438
2.187	=	2	=	1.8288
3.281	=	3	=	2.7432
4.374	=	4	=	3.6576
5.468	=	5	=	4.5720
6.562	=	6	=	5.4864
7.655	=	7	=	6.4008
8.749	=	8	=	7.3152
9.843	=	9	=	8.2296
10.936	=	10	=	9.144
16.404	=	15	=	13.716
21.873	=	20	=	18.288
27.341	=	25	=	22.860
32.809	=	30	=	27.432
38.277	=	35	=	32.004
43.745	=	40	=	36.576
49.213	=	45	=	41.148
54.682	=	50	=	45.720
60.150	=	55	=	50.292
65.618	=	60	=	54.864
71.086	=	65	=	59.436
76.554	=	70	=	64.008
82.022	=	75	=	68.580
87.491	=	80	=	73.152
92.959	=	85	=	77.724
98.427	=	90	=	82.296
103.895	=	95	=	86.868
109.363	=	100	=	91.44
218.727	=	200	=	182.88
328.090	=	300	=	274.32
437.453	=	400	=	365.76
546.816	=	500	=	457.20

Conversion table – millimetres to inches

mm	inches	mm	inches
1 =	0.03937	31 =	1.22047
2 =	0.07874	32 =	1.25984
3 =	0.11811	33 =	1.29921
4 =	0.15748	34 =	1.33858
5 =	0.19685	35 =	1.37795
6 =	0.23622	36 =	1.41732
7 =	0.27559	37 =	1.45669
8 =	0.31496	38 =	1.49606
9 =	0.35433	39 =	1.53543
10 =	0.39370	40 =	1.57480
11 =	0.43307	41 =	1.61417
12 =	0.47244	42 =	1.65354
13 =	0.51181	43 =	1.69291
14 =	0.55118	44 =	1.73228
15 =	0.59055	45 =	1.77165
16 =	0.62992	46 =	1.81102
17 =	0.66929	47 =	1.85039
18 =	0.70866	48 =	1.88976
19 =	0.74803	49 =	1.92913
20 =	0.78740	50 =	1.96850
21 =	0.82677	55 =	2.16535
22 =	0.86614	60 =	2.36220
23 =	0.90551	65 =	2.55905
24 =	0.94488	70 =	2.75590
25 =	0.98425	75 =	2.95275
26 =	1.02362	80 =	3.14960
27 =	1.06299	85 =	3.34645
28 =	1.10236	90 =	3.54330
29 =	1.14173	95 =	3.74015
30 =	1.18110	100 =	3.93700

Conversion table – millimetres to inches and leather substance in ounces

Inch			mm	Inch			mm
vulgar fraction	Decimal fraction	Ounces		vulgar fraction	Decimal fraction	Ounces	
1/64	0.016	1	0.397	33/64	0.516	33	13.097
1/32	0.031	2	0.794	17/32	0.531	34	13.494
3/64	0.047	3	1.191	35/64	0.547	35	13.890
1/16	0.063	4	1.587	9/16	0.563	36	14.287
5/64	0.078	5	1.984	37/64	0.578	37	14.684
3/32	0.094	6	2.381	19/32	0.594	38	15.081
7/64	0.109	7	2.778	39/64	0.609	39	15.478
1/8	0.125	8	3.175	5/8	0.625	40	15.875
9/64	0.141	9	3.572	41/64	0.641	41	16.272
5/32	0.156	10	3.969	21/32	0.656	42	16.669
11/64	0.172	11	4.366	43/64	0.672	43	17.066
3/16	0.188	12	4.723	11/16	0.688	44	17.462
13/64	0.203	13	5.159	45/64	0.703	45	17.859
7/32	0.219	14	5.556	23/64	0.719	46	18.256
15/64	0.234	15	5.953	47/64	0.734	47	18.653
1/4	0.250	16	6.350	3/4	0.750	48	19.050
17/64	0.266	17	6.747	49/64	0.766	49	19.447
9/32	0.281	18	7.144	25/32	0.781	50	19.844
19/64	0.297	19	7.541	51/64	0.797	51	20.241
5/16	0.313	20	7.937	13/16	0.813	52	20.638
21/64	0.328	21	8.334	53/64	0.828	53	21.034
11/32	0.344	22	8.731	27/32	0.844	54	21.431
23/64	0.359	23	9.128	55/64	0.859	55	21.828
3/8	0.375	24	9.525	7/8	0.875	56	22.225
25/64	0.391	25	9.922	57/64	0.891	57	22.622
13/32	0.406	26	10.319	29/32	0.906	58	23.018
27/64	0.422	27	10.716	59/64	0.922	59	23.416
7/16	0.438	28	11.112	15/16	0.938	60	23.812
29/64	0.453	29	11.509	61/64	0.953	61	24.209
15/32	0.469	30	11.906	31/32	0.969	62	24.606
31/64	0.484	31	12.303	63/64	0.984	63	25.003
1/2	0.500	32	12.700	1	1.000	64	25.400

Units of area

Metric units of area

1 square kilometre (km^2) = 100 hectares (ha) = 10 000 ares (a)
1 hectare (ha) = 100 ares (a) = 10 000 square metres (m^2)
1 square metre (m^2) = 100 square decimetres (dm^2)
1 square decimetre (dm^2) = 100 square centimetres (cm^2)
1 square centimetre (cm^2) = 100 square millimetres (mm^2)

Other units of area

1 German square mile = 56.738255 km^2
1 Morgen = 2553.1668 m^2
1 Viertel = 638.2917 m^2
1 Quadratfuß = 0.0985 m^2

British and US units of area

1 square inch (sq.in) = 6.452 cm^2
1 square foot (sq.ft.) = 929 cm^2 = 9.29 dm^2
1 square yard (sq.yd.) = 8361 cm^2 = 83.61 dm^2
1 acre (A) = 4047 m^2
1 square mile = 2.588 km^2

Conversion factors for units of area

	sq. inch	sq. foot	sq. yard	acre	cm^2	m^2
1 square inch	1	–	–	–	6.452	–
1 square foot	144	1	0.1111	–	929	0.0929
1 square yard	1296	9	1	–	8361	0.8361
1 acre	–	43560	4840	1	–	4047
1 cm^2	0.155	–	–	–	1	0.0001
1 m^2	1550	10.76	1.196	–	10000	1

Conversion table – square metres to square feet

Conversion factor: 1 m^2 = 10.764 sq. ft.

m^2	sq. ft.	m^2	sq. ft.	m^2	sq. ft.
0.01 =	0.108	0.37 =	3.982	0.73 =	7.858
0.02 =	0.215	0.38 =	4.090	0.74 =	7.965
0.03 =	0.323	0.39 =	4.197	0.75 =	8.073
0.04 =	0.430	0.40 =	4.306	0.76 =	8.181
0.05 =	0.538	0.41 =	4.414	0.77 =	8.288
0.06 =	0.646	0.42 =	4.521	0.78 =	8.396
0.07 =	0.753	0.43 =	4.629	0.79 =	8.503
0.08 =	0.861	0.44 =	4.736	0.80 =	8.611
0.09 =	0.968	0.45 =	4.844	0.81 =	8.719
0.10 =	1.076	0.46 =	4.952	0.82 =	8.826
0.11 =	1.184	0.47 =	5.059	0.83 =	8.934
0.12 =	1.291	0.48 =	5.167	0.84 =	9.041
0.13 =	1.399	0.49 =	5.274	0.85 =	9.149
0.14 =	1.509	0.50 =	5.382	0.86 =	9.257
0.15 =	1.614	0.51 =	5.490	0.87 =	9.364
0.16 =	1.722	0.52 =	5.597	0.88 =	9.472
0.17 =	1.829	0.53 =	5.705	0.89 =	9.579
0.18 =	1.937	0.54 =	5.812	0.90 =	9.688
0.19 =	2.044	0.55 =	5.920	0.91 =	9.796
0.20 =	2.153	0.56 =	6.028	0.92 =	9.903
0.21 =	2.261	0.57 =	6.135	0.93 =	10.011
0.22 =	2.368	0.58 =	6.243	0.94 =	10.118
0.23 =	2.467	0.59 =	6.350	0.95 =	10.226
0.24 =	2.583	0.60 =	6.459	0.96 =	10.334
0.25 =	2.691	0.61 =	6.567	0.97 =	10.441
0.26 =	2.799	0.62 =	6.674	0.98 =	10.549
0.27 =	2.906	0.63 =	6.782	0.99 =	10.656
0.28 =	3.014	0.64 =	6.889	1.00 =	10.764
0.29 =	3.121	0.65 =	6.997	2.00 =	21.529
0.30 =	3.229	0.66 =	7.105	5.00 =	53.821
0.31 =	3.337	0.67 =	7.212	10.00 =	107.643
0.32 =	3.444	0.68 =	7.320	20.00 =	215.285
0.33 =	3.552	0.69 =	7.427	30.00 =	322.928
0.34 =	3.659	0.70 =	7.535	40.00 =	430.571
0.35 =	3.767	0.71 =	7.643	50.00 =	538.213
0.36 =	3.875	0.72 =	7.750	100.00 =	1076.426

Conversion table – square feet to square metres

Conversion factor: 1 sq. ft. = 0.0929 m^2

sq. ft.	m^2	sq. ft.	m^2	sq. ft.	m^2
⅛ =	0.0116	33 =	3.0657	69 =	6.4101
¼ =	0.0219	34 =	3.1586	70 =	6.5030
½ =	0.0464	35 =	3.2515	71 =	6.5959
¾ =	0.0696	36 =	3.3444	72 =	6.6888
1 =	0.0929	37 =	3.4373	73 =	6.7817
2 =	0.1858	38 =	3.5302	74 =	6.8746
3 =	0.2787	39 =	3.6231	75 =	6.9675
4 =	0.3716	40 =	3.7160	76 =	7.0604
5 =	0.4645	41 =	3.8039	77 =	7.1533
6 =	0.5574	42 =	3.9018	78 =	7.2462
7 =	0.6503	43 =	3.9947	79 =	7.3391
8 =	0.7432	44 =	4.0876	80 =	7.4320
9 =	0.8361	45 =	4.1805	81 =	7.5249
10 =	0.9290	46 =	4.2734	82 =	7.6178
11 =	1.0219	47 =	4.3663	83 =	7.7107
12 =	1.1148	48 =	4.4592	84 =	7.8036
13 =	1.2077	49 =	4.5521	85 =	7.8965
14 =	1.3006	50 =	4.6450	86 =	7.9894
15 =	1.3935	51 =	4.7379	87 =	8.0823
16 =	1.4864	52 =	4.8308	88 =	8.1752
17 =	1.5793	53 =	4.9237	89 =	8.2681
18 =	1.6722	54 =	5.0166	90 =	8.3610
19 =	1.7651	55 =	5.1095	91 =	8.4539
20 =	1.8580	56 =	5.2024	92 =	8.5468
21 =	1.9509	57 =	5.2953	93 =	8.6397
22 =	2.0438	58 =	5.3882	94 =	8.7326
23 =	2.1367	59 =	5.4811	95 =	8.8255
24 =	2.2296	60 =	5.5740	96 =	8.9184
25 =	2.3225	61 =	5.6669	97 =	9.0113
26 =	2.4154	62 =	5.7598	98 =	9.1042
27 =	2.5083	63 =	5.8527	99 =	9.1971
28 =	2.6012	64 =	5.9456	100 =	9.2903
29 =	2.6941	65 =	6.0385	200 =	18.5806
30 =	2.7870	66 =	6.1314	300 =	27.8709
31 =	2.8799	67 =	6.2243	400 =	37.1612
32 =	2.9728	68 =	6.3172	500 =	46.4515

Units of volume

Metric units of volume and capacity

1 cubic metre (m^3) = 1000 cubic decimetres (dm^3)
1 cubic decimetre (dm^3) = 1000 cubic centimetres (cm^3)
1 cubic centimentre (cm^3) = 1000 cubic millimetres (mm^3)
1 litre (l) = 1 cubic decimetre (dm^3)
1 hecto litre (hl) = 100 litres (l) = 1000 decilitres (dl)
1 litre (l) = 10 decilitres (dl) = 1000 millilitres (ml)
1 decilitre (dl) = 100 millilitres (ml)

Conversion factors for units of volume and capacity

	cubic inch	cubic foot	cubic yard	gallon (US)	cm^3	dm^3 (l)
1 cubic inch	1	–	–	–	16.39	0.0164
1 cubic foot	1728	1	0.0369	7.481	–	28.32
1 cubic yard	46656	27	1	202	–	746.6
1 gallon (US)	231	0.1337	–	1	3785	3.785
1 cm^3	0.061	–	–	–	1	0.001
1 dm^3	61.02	0.035	–	0.2642	1000	1

British and US units of volume and capacity

1 cubic yard (yd^3 or cu.yd.) = 0.764553 m^3 = 764.6 dm^3 (l)

1 cubic foot (ft^3 or cu.ft.) = 28.317 dm^3

1 cubic inch (in^3 or cu.in.) = 16.387 cm^3

1 liquid quarter (liq.quarter) Brit. = 289.5 l

1 liquid quarter (liq.quarter) US = 281.92 l

1 quart (qt) Brit. = 2 pints = 1.136 l

1 quart (qt) US = 2 pints = 0.946 l

1 pint (pt) Brit. = 4 gills = 0.568 l

1 pint (pt) US = 4 gills = 0.473 l

1 gill (Brit.) = 142 cm^3 = 0.568 l

1 gill (US) = 118 cm^3 = 0.473 l

1 gallon (Brit.) = 8 pints = 4.5461 l

1 gallon (US liquid) = 3.7852 l

1 gallon (grain) US = 4.4046 l

1 bushel (bu) US = 35.242 l

1 bushel (bu) Brit. = 8 gallons = 36.368 l

1 barrel (Brit.) = 36 gallons = 1.635 hl

1 barrel (Petrol) US = 42 gallons = 1.5898 hl

1 barrel (Beer) US = 31 gallons = 1.173 hl

1 register ton = 100 cu. ft. = 2.832 m^3 = 2832 l

Conversion table – litres and gallons (Brit. and US)

gallons β litres (Brit.)					gallons β litres (US)				
		gallons (Brit.)		γ litres			gallonsγ (US)		litres
0.2200	=	1	=	4.5461	0.2642	=	1	=	3.7852
0.4399	=	2	=	9.0922	0.5283	=	2	=	7.5704
0.6599	=	3	=	13.6383	0.7925	=	3	=	11.3556
0.8799	=	4	=	18.1844	1.0567	=	4	=	15.1408
1.0998	=	5	=	22.7305	1.3209	=	5	=	18.9260
1.3198	=	6	=	27.2766	1.5850	=	6	=	22.7112
1.5398	=	7	=	31.8227	1.8492	=	7	=	26.4964
1.7598	=	8	=	36.3688	2.1134	=	8	=	30.2816
1.9797	=	9	=	40.9149	2.3776	=	9	=	34.0668
2.1997	=	10	=	45.4610	2.6419	=	10	=	37.8520
2.4197	=	11	=	50.0071	2.9060	=	11	=	41.6372
2.6396	=	12	=	54.5532	3.1702	=	12	=	45.4224
2.8596	=	13	=	59.0993	3.4344	=	13	=	49.2076
3.0796	=	14	=	63.6454	3.6986	=	14	=	52.9928
3.2995	=	15	=	68.1915	3.9628	=	15	=	56.7780
3.5195	=	16	=	72.7376	4.2269	=	16	=	60.5632
3.7395	=	17	=	77.2837	4.4911	=	17	=	64.3484
3.9594	=	18	=	81.8298	4.7553	=	18	=	68.1336
4.1794	=	19	=	86.3759	5.0195	=	19	=	71.9188
4.3994	=	20	=	90.9220	5.2837	=	20	=	75.7040
4.6194	=	21	=	95.4681	5.5479	=	21	=	79.4892
4.8394	=	22	=	100.0142	5.8121	=	22	=	83.2744
5.0593	=	23	=	104.5603	6.0763	=	23	=	87.0596
5.2793	=	24	=	109.1064	6.3405	=	24	=	90.8448
5.4993	=	25	=	113.6525	6.6047	=	25	=	94.6300
5.7192	=	26	=	118.1986	6.8689	=	26	=	98.4152
5.9392	=	27	=	122.7447	7.1331	=	27	=	102.2004
6.1592	=	28	=	127.2908	7.3973	=	28	=	105.9856
6.3791	=	29	=	131.8369	7.6615	=	29	=	109.7708
6.5991	=	30	=	136.3830	7.9256	=	30	=	113.5560

gallons (Brit.)	β	litres			gallons (US)	β	litres		
		gallons (Brit.)	γ	litres			gallons (US)	γ	litres
6.8191	=	31	=	140.9291	8.1898	=	31	=	117.3412
7.0391	=	32	=	145.4752	8.4540	=	32	=	121.1264
7.2591	=	33	=	150.0213	8.7182	=	33	=	124.9116
7.4790	=	34	=	154.5674	8.9824	=	34	=	128.6968
7.6990	=	35	=	159.1135	9.2466	=	35	=	132.4820
7.9190	=	36	=	163.6596	9.5108	=	36	=	136.2672
8.1389	=	37	=	168.2057	9.7750	=	37	=	140.0524
8.3589	=	38	=	172.7518	10.0392	=	38	=	143.8376
8.5789	=	39	=	177.2979	10.3034	=	39	=	147.6228
8.7988	=	40	=	181.8440	10.5674	=	40	=	151.4080
9.0188	=	41	=	186.3901	10.8316	=	41	=	155.1932
9.2388	=	42	=	190.9362	11.0958	=	42	=	158.9784
9.4587	=	43	=	195.4823	11.3600	=	43	=	162.7636
9.6787	=	44	=	200.0284	11.6242	=	44	=	166.5488
9.8986	=	45	=	204.5745	11.8884	=	45	=	170.3340
10.1186	=	46	=	209.1206	12.1526	=	46	=	174.1192
10.3385	=	47	=	213.6667	12.4168	=	47	=	177.9044
10.5585	=	48	=	218.2128	12.6810	=	48	=	181.6896
10.7784	=	49	=	222.7589	12.9452	=	49	=	185.4748
10.9984	=	50	=	227.3050	13.2093	=	50	=	189.2600
12.0982	=	55	=	250.0355	14.5302	=	55	=	208.1860
13.1980	=	60	=	272.7660	15.8511	=	60	=	227.1120
14.2978	=	65	=	295.4965	17.1720	=	65	=	246.0380
15.3976	=	70	=	318.2270	18.4929	=	70	=	264.9640
16.4974	=	75	=	340.9575	19.8138	=	75	=	283.8900
17.5972	=	80	=	363.6880	21.1347	=	80	=	302.8160
18.6970	=	85	=	386.4185	22.4556	=	85	=	321.7420
19.7968	=	90	=	409.1490	23.7765	=	90	=	340.6680
20.8966	=	95	=	431.8795	25.0974	=	95	=	359.5940
21.9969	=	100	=	454.6100	26.4188	=	100	=	378.5200

Units of weight

Metric units of weights

SI base unit = kilogram (kg)

1 tonne (t) = 1000 kilograms (kg)
1 kilogram (kg) = 1000 grams (g)
1 gram (g) = 1000 milligrams (mg)
1 carat (metric) (k) = 0.2 gram (g) = 200 milligrams (mg)

British and US units of weight

1 grain (gr) = 64.8 mg
1 carat (for jewels) (ct) = 4 grains = 205.3 mg
1 ounce (oz) = 28.35 g
1 libre (lb) = 1 pound = 16 ounces = 453.6 g
1 pound (lb) = 1 libre = 16 ounces = 453.6 g
1 stone = 6.350 kg
1 quarter = 12.7 kg
1 short ton (ship tonnage) (shtn.) = 2000 pounds = 907.185 kg
1 long ton (ltn.) = 80 quarters = 1016 kg

Conversion factors for units of weight

	lbs	shtn.	ltn.	kg
1 pound	1	–	–	0.454
1 short ton	2000	1	0.8929	907.9
1 long ton	2240	1.120	1	1016
1 kg	2.205	0.0011	0.00098	1

Conversion table – kilograms (kg) and pounds (lbs)

Pounds (lbs)	β	kilograms (kg) Pounds (lbs)	γ	kg	Pounds (lbs)	β	kilograms (kg) Pounds (lbs)	γ	kg
2.2046	=	1	=	0.453	68.3436	=	31	=	14.047
4.4093	=	2	=	0.906	70.5482	=	32	=	14.500
6.6139	=	3	=	1.359	72.7528	=	33	=	14.953
8.8185	=	4	=	1.812	74.9574	=	34	=	15.406
11.0232	=	5	=	2.265	77.1620	=	35	=	15.859
13.2278	=	6	=	2.719	79.3666	=	36	=	16.312
15.4324	=	7	=	3.172	81.5712	=	37	=	16.765
17.6371	=	8	=	3.625	83.7758	=	38	=	17.218
19.8417	=	9	=	4.078	85.9804	=	39	=	17.671
22.0463	=	10	=	4.531	88.1854	=	40	=	18.125
24.2510	=	11	=	4.984	90.3896	=	41	=	18.578
26.4556	=	12	=	5.437	92.5942	=	42	=	19.031
28.6602	=	13	=	5.890	94.7988	=	43	=	19.484
30.8649	=	14	=	6.343	97.0034	=	44	=	19.937
33.0695	=	15	=	6.796	99.2080	=	45	=	20.390
35.2741	=	16	=	7.249	101.4126	=	46	=	20.843
37.4788	=	17	=	7.702	103.6172	=	47	=	21.296
39.6835	=	18	=	8.155	105.8218	=	48	=	21.749
41.8880	=	19	=	8.608	108.0264	=	49	=	22.202
44.0927	=	20	=	9.062	110.2317	=	50	=	22.656
46.2973	=	21	=	9.515	121.2542	=	55	=	24.921
48.5019	=	22	=	9.968	132.2780	=	60	=	27.187
50.7065	=	23	=	10.421	143.3012	=	65	=	29.452
52.9111	=	24	=	10.874	154.3244	=	70	=	31.719
55.1157	=	25	=	11.327	165.3476	=	75	=	33.984
57.3203	=	26	=	11.780	176.3707	=	80	=	36.250
59.5249	=	27	=	12.233	187.3939	=	85	=	38.515
61.7295	=	28	=	12.686	198.4171	=	90	=	40.781
63.9341	=	29	=	13.139	209.4403	=	95	=	43.046
66.1390	=	30	=	13.594	220.4634	=	100	=	45.302

Conversion table – grams (g) and ounces (oz)

Grams β (g)		ounces (oz) Grams (g)		ounces γ (oz)	Grams β (g)		kilograms (kg) Pounds (lbs)		γ kg
28.35	=	1	=	0.0353	878.8	=	31	=	1.093
56.70	=	2	=	0.0706	907.2	=	32	=	1.129
85.05	=	3	=	0.1058	935.5	=	33	=	1.164
113.40	=	4	=	0.1411	963.9	=	34	=	1.199
141.74	=	5	=	0.1764	992.2	=	35	=	1.235
170.10	=	6	=	0.2116	1020.6	=	36	=	1.270
198.45	=	7	=	0.2469	1048.9	=	37	=	1.305
226.80	=	8	=	0.2822	1077.3	=	38	=	1.340
255.15	=	9	=	0.3174	1105.6	=	39	=	1.376
283.50	=	10	=	0.3527	1134.0	=	40	=	1.411
311.8	=	11	=	0.3880	1162.3	=	41	=	1.446
340.2	=	12	=	0.4232	1190.7	=	42	=	1.481
368.5	=	13	=	0.4585	1219.0	=	43	=	1.517
396.9	=	14	=	0.4938	1247.4	=	44	=	1.552
425.2	=	15	=	0.5291	1275.7	=	45	=	1.587
453.6	=	16	=	0.5642	1304.1	=	46	=	1.623
481.9	=	17	=	0.5997	1332.4	=	47	=	1.658
510.3	=	18	=	0.6349	1360.8	=	48	=	1.693
538.6	=	19	=	0.6702	1389.1	=	49	=	1.728
567.0	=	20	=	0.7054	1417.5	=	50	=	1.764
595.3	=	21	=	0.7407	1559	=	55	=	1.940
623.7	=	22	=	0.7760	1701	=	60	=	2.116
652.0	=	23	=	0.8113	1843	=	65	=	2.293
680.4	=	24	=	0.8465	1985	=	70	=	2.469
708.7	=	25	=	0.8818	2126	=	75	=	2.645
737.1	=	26	=	0.9171	2268	=	80	=	2.822
765.4	=	27	=	0.9523	2410	=	85	=	2.998
793.8	=	28	=	0.9876	2552	=	90	=	3.175
822.1	=	29	=	1.0229	2693	=	95	=	3.351
850.5	=	30	=	1.0581	2835	=	100	=	3.527

Conversion tables – Imp./US units and SI units

SI unit $\longrightarrow$ Imp./US unit	Imp./US unit $\longrightarrow$ SI unit
Force	
$1\ \text{N} = 1\ \frac{\text{kg}\cdot\text{m}}{\text{s}^2} = 2.248\cdot10^{-1}\ \text{lbf}$	$1\ \text{lbf} = 4.448 = \frac{\text{kg}\cdot\text{m}}{\text{s}^2} = 4.448\ \text{N}$
Pressure	
$1\ \text{Pa} = 1\ \frac{\text{N}}{\text{m}^2} = 1.450\cdot10^{-4}\ \frac{\text{lbf}}{\text{in}^2}$ $= 2.953\cdot10^{-4}\ \text{in Hg}$ $= 4.015\cdot10^{-3}\ \text{in H}_2\text{O}$	$1\ \frac{\text{lbf}}{\text{in}^2} = 1\ \text{psi} = 6.89475\cdot10^{3}\ \text{Pa}$ $= 6.89475\cdot10^{-2}\ \text{bar}$
$1\ \text{bar} = 10^5\ \text{Pa} = 1.450\cdot10^{1}\ \frac{\text{lbf}}{\text{in}^2}$ $= 2.953\cdot10^{1}\ \text{in Hg}$ $= 4.015\cdot10^{2}\ \text{in H}_2\text{O}$	$1\ \text{in Hg} = 3.38638\cdot10^{3}\ \text{Pa}$ $= 3.38638\cdot10^{-2}\ \text{bar}$ $1\ \text{in H}_2\text{O} = 2.49089\cdot10^{2}\ \text{Pa}$ $= 2.49089\cdot10^{-3}\ \text{bar}$
Mechanical stress	
$1\ \frac{\text{N}}{\text{mm}^2} = 1.450\cdot10^{2}\ \frac{\text{lbf}}{\text{in}^2}$	$1\ \frac{\text{lbf}}{\text{in}^2} = 6.89475\cdot10^{-3}\ \frac{\text{N}}{\text{mm}^2}$
Dynamic viscosity	
$1\ \text{Pa}\cdot\text{s} = 1\ \frac{\text{N}\cdot\text{s}}{\text{m}^2} = 2.089\cdot10^{2}\ \frac{\text{lbf}\cdot\text{s}}{\text{ft}^2}$ $1\ \frac{\text{kg}}{\text{m}\cdot\text{s}} = 6.72\cdot10^{-1}\ \frac{\text{lb}}{\text{ft}\cdot\text{s}}$	$1\ \frac{\text{lbf}\cdot\text{s}}{\text{ft}^2} = 4.78802\cdot10^{1}\ \text{Pa}\cdot\text{s}$ $1\ \frac{\text{lb}}{\text{ft}\cdot\text{s}} = 1.488\ \text{Pa}\cdot\text{s}$
Kinematic viscosity	
$1\ \frac{\text{m}^2}{\text{s}} = 1.076\cdot10^{1}\ \frac{\text{ft}^2}{\text{s}}$	$1\ \frac{\text{ft}^2}{\text{s}} = 9.29\cdot10^{-2}\ \frac{\text{m}^2}{\text{s}}$

SI unit $\longrightarrow$ Imp./US unit	Imp./US unit $\longrightarrow$ SI unit

Energy, work, quantity of heat

$1\ \mathrm{J} = 1\mathrm{Ws} = 1\mathrm{Nm} = 7.376\cdot10^{-1}\ \mathrm{ft\ lbf}$	$1\ \mathrm{ft\ lbf} = 1.35582\ \mathrm{J}$
$1\ \mathrm{kJ} = 9.478\cdot10^{-1}\ \mathrm{Btu}$	$1\ \mathrm{Btu} = 1.05506\ \mathrm{kJ}$

Power, heat flow

$1\ \mathrm{W} = 1\ \frac{\mathrm{N\ m}}{\mathrm{s}} = 7.367\cdot10^{-1}\ \frac{\mathrm{ft\ lbf}}{\mathrm{s}}$	$1\ \frac{\mathrm{ft\ lbf}}{\mathrm{s}} = 1.35582\ \mathrm{W}$
$= 1\ \frac{\mathrm{J}}{\mathrm{s}} = 4.42\cdot10^{1}\ \frac{\mathrm{ft\ lbf}}{\mathrm{min}}$	$1\ \frac{\mathrm{ft\ lbf}}{\mathrm{min}} = 2.25969\cdot10^{-2}\ \mathrm{W}$
$= 3.412\ \frac{\mathrm{Btu}}{\mathrm{h}}$	$1\ \frac{\mathrm{Btu}}{\mathrm{h}} = 2.930\cdot10^{-1}\ \mathrm{W}$

Specific thermal capacity

$1\ \frac{\mathrm{J}}{\mathrm{kg\ K}} = 2.388\cdot10^{-4}\ \frac{\mathrm{Btu}}{\mathrm{lb\ °F}}$	$1\ \frac{\mathrm{Btu}}{\mathrm{lb\ °F}} = 4.1868\cdot10^{3}\ \frac{\mathrm{J}}{\mathrm{kg\ K}}$
$1\ \frac{\mathrm{J}}{\mathrm{m^3\ K}} = 1.491\cdot10^{-5}\ \frac{\mathrm{Btu}}{\mathrm{ft^3\ °F}}$	$1\ \frac{\mathrm{Btu}}{\mathrm{ft^3\ °F}} = 6.71\cdot10^{4}\ \frac{\mathrm{J}}{\mathrm{m^3\ K}}$

Thermal conductivity

$1\ \frac{\mathrm{W}}{\mathrm{m\ K}} = 6.933\ \frac{\mathrm{Btu\ in}}{\mathrm{ft^2\ h\ °F}}$	$1\ \frac{\mathrm{Btu\ in}}{\mathrm{ft^2\ h\ °F}} = 1.442\cdot10^{-1}\ \frac{\mathrm{W}}{\mathrm{m\ K}}$
$= 5.778\cdot10^{-1}\ \frac{\mathrm{Btu}}{\mathrm{ft\ h\ °F}}$	$1\ \frac{\mathrm{Btu}}{\mathrm{ft\ h\ °F}} = 1.7307\ \frac{\mathrm{W}}{\mathrm{m\ K}}$
$= 4.815\cdot10^{-2}\ \frac{\mathrm{Btu}}{\mathrm{in\ h\ °F}}$	$1\ \frac{\mathrm{Btu}}{\mathrm{in\ h\ °F}} = 2.07689\cdot10^{1}\ \frac{\mathrm{W}}{\mathrm{m\ K}}$

SI unit $\longrightarrow$ Imp./US unit	Imp./US unit $\longrightarrow$ SI unit

Heat flow rate

$1\ \frac{\mathrm{W}}{\mathrm{m}^2} = 3.17\cdot10^{-1}\ \frac{\mathrm{Btu}}{\mathrm{ft}^2\ \mathrm{h}}$	$1\ \frac{\mathrm{Btu}}{\mathrm{ft}^2\ \mathrm{h}} = 3.1546\ \frac{\mathrm{W}}{\mathrm{m}^2}$
$= 2.201\cdot10^{-3}\ \frac{\mathrm{Btu}}{\mathrm{in}^2\ \mathrm{h}}$	$1\ \frac{\mathrm{Btu}}{\mathrm{in}^2\ \mathrm{h}} = 4.54263\cdot10^{2}\ \frac{\mathrm{W}}{\mathrm{m}^2}$

Coefficient of heat transfer

$1\ \frac{\mathrm{W}}{\mathrm{m}^2\mathrm{K}} = 1.761\cdot10^{-1}\ \frac{\mathrm{Btu}}{\mathrm{ft}^2\ \mathrm{h}\ ^\circ\mathrm{F}}$	$1\ \frac{\mathrm{Btu}}{\mathrm{ft}^2\ \mathrm{h}\ ^\circ\mathrm{F}} = 5.678\ \frac{\mathrm{W}}{\mathrm{m}^2\ \mathrm{K}}$

Heat transfer resistance

$1\ \frac{\mathrm{m}^2\ \mathrm{K}}{\mathrm{W}} = 5.678\ \frac{\mathrm{ft}^2\ \mathrm{h}\ ^\circ\mathrm{F}}{\mathrm{Btu}}$	$1\ \frac{\mathrm{ft}^2\ \mathrm{h}\ ^\circ\mathrm{F}}{\mathrm{Btu}} = 1.761\cdot10^{-1}\ \frac{\mathrm{m}^2\ \mathrm{K}}{\mathrm{W}}$

Temperature interval

1 K = 1 °C = 1.8 °F	$1\ ^\circ\mathrm{F} = 5.555\cdot10^{-1}\ \mathrm{K}$ $= 5.555\cdot10^{-1}\ ^\circ\mathrm{C}$

lbf = pound-force
Btu = British thermal unit
$\frac{\mathrm{lbf}}{\mathrm{in}^2}$ = pound-force per square inch

Formulae

Determination of some areas and perimeters

	Perimeter	Area
1. Square	$4\ s$	s^2
2. Rectangle	$2\ (g + h)$	$g \cdot h$
3. Triangle	sum of all sides	$\frac{g \cdot h}{2}$
4. Trapezoid	sum of all sides	$\frac{G + g}{2} \cdot h$
5. Circle	$2\ \Theta r$ or Θd	Θr^2 $\frac{\Theta d^2}{4}$
6. Ellipse	$\frac{\Theta D + d^*}{2}$	$\frac{\Theta}{4} \cdot D \cdot d$

* *Approximate value*

s = length of side
g = base line
G = height
h = large base line
r = radius
D = large diameter (axis)
d = diameter
Θ = 3.14

Determination of some volumes

1. Cube = a^3
2. Prism (right rectangular) = $a \cdot b \cdot h$
3. Cylinder (drum) = $\Theta r^2 h$
4. Pyramid = $\frac{G \cdot h}{3}$
5. Right cone = $\frac{\Theta \cdot r^2 \cdot h}{3}$
6. Sphere = $\frac{4}{3} \Theta r^2$
7. Drum with curved surfaces = $\frac{\Theta d \cdot h (2 D^2 + d^2)^*}{12}$

* Approximate value

a, b = length of side
h = height
G = base area
D = large diameter at center of drum
d = diameter
r = radius
Θ = 3.14

Determination of the volume of a paddle

As a rule, a paddle consists of a hollow semi-cylinder topped by a hollow prism. In order to determine the volume of a paddle, the volume of the hollow semi-cylinder has to be figured out and added to that of the hollow prism. The volume of the hollow prism is calculated by multiplying the paddle length x paddle width x height of right rectangular prism. The height of the prism can be measured from the upper edge of the paddle to the beginning of the rounding of the paddle. The following formula is thus obtained:

$V_{prism} = a \cdot b \cdot c$

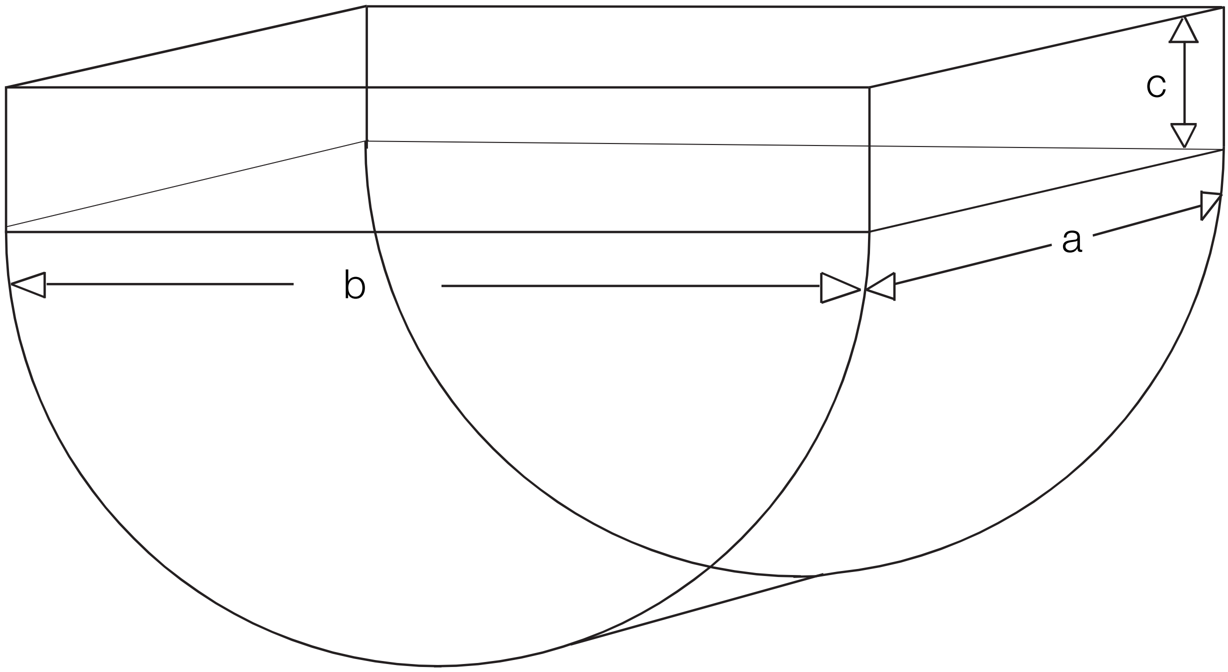

The volume of the hollow semi-cylinder can be calculated from the length and the width of the paddle with the aid of the factor 3.14 (= Θ) according to the following formula:

$V = \frac{\Theta r^2 h}{2}$ or $V_{semi\text{-}cylinder} = \frac{a \cdot b \cdot b \cdot 3.14}{8}$

By adding the volume of the prism and the volume of the hollow semi-cylinder, the total volume of the paddle is obtained. Thus

$V_{paddle} = V_{prism} + V_{semi\text{-}cylinder}$

$V_{paddle} = a \cdot b \cdot c + \frac{a \cdot b \cdot b \cdot 3.14}{8}$

Example:	If on a paddle the length	is $a = 1.80$ m
	the width	is $b = 1.50$ m
	and the height of the right rectangular prism	is $c = 0.35$ m

the volume of the paddle can be calculated according to the formula given as follows:

$$V_{paddle} = 1.8 \cdot 1.5 \cdot 0.35 + \frac{1.8 \cdot 1.5 \cdot 1.5 \cdot 3.14}{8}$$

$$= 2{,}534 \text{ m}^3 \text{ or } 2534 \text{ l}$$

Determination of the volume of a drum

Since the drum is a hollow cylinder, its volume can be more easily determined. The measures required are only the inner diameter of the drum and the inner length of the staves. Thus, the formula is as follows:

$$V_{drum} = \Theta \cdot r^2 \cdot h \text{ or}$$

$$V_{drum} = \frac{d \cdot d \cdot a \cdot 3.14}{4}$$

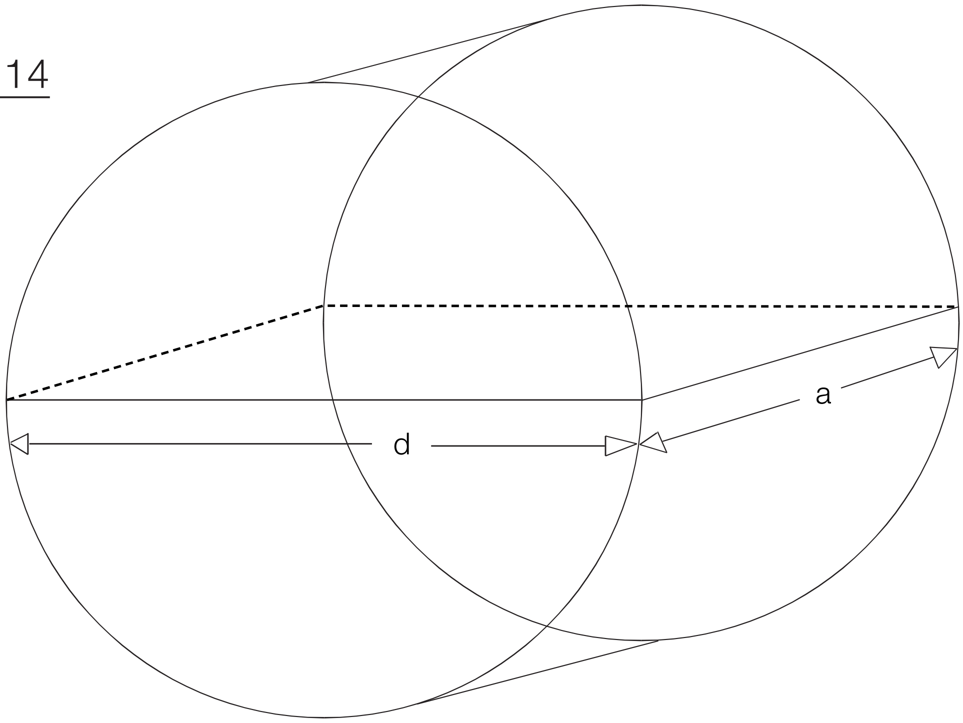

Example: If of a drum the inner diameter (d = 3 m) and the inner stave length (a = 2.9 m) are known, and if these figures are applied to the above formula, then

$$V_{drum} = \frac{3 \cdot 3 \cdot 2.9 \cdot 3.14}{4} = 20.4885 \text{ m}^3 = \text{m}^3 \text{ i.e. roughly } 20.5 \text{ m}^3$$

Since a tanning drum is usually filled only up to the hollow axle, the total volume of the drum is divided by 2:

20.5 : 2 = 10.25 m^3

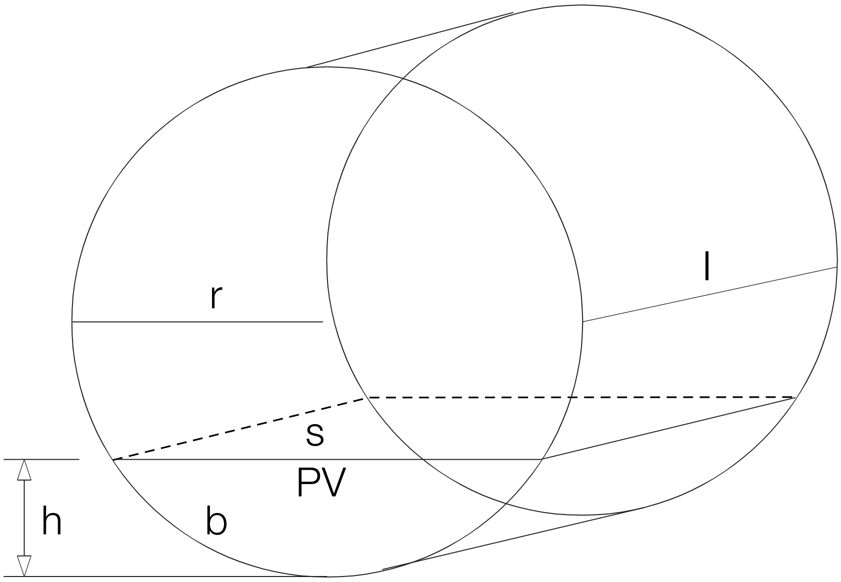

Partial volume of drum

$$PV = \frac{r\,(b-s) + s \cdot h}{2} \cdot l$$

r = radius
b = arc
s = chord
h = height
l = length

Optimum r. p. m. of processing drums for the appropriate load volume with non-carrying float lengths

The volume of the load (VL) should not be so large that the diameter of the load bale (dL) becomes too great.
Otherwise, the revolving speed of the load bale (nL) will drop below the critical limit when the drum is run at the speed calculated to give the optimum mixing effect. This deficiency can no longer be corrected by increasing the r.p.m. of the drum (nD).

The conditions are fulfilled by the following function:

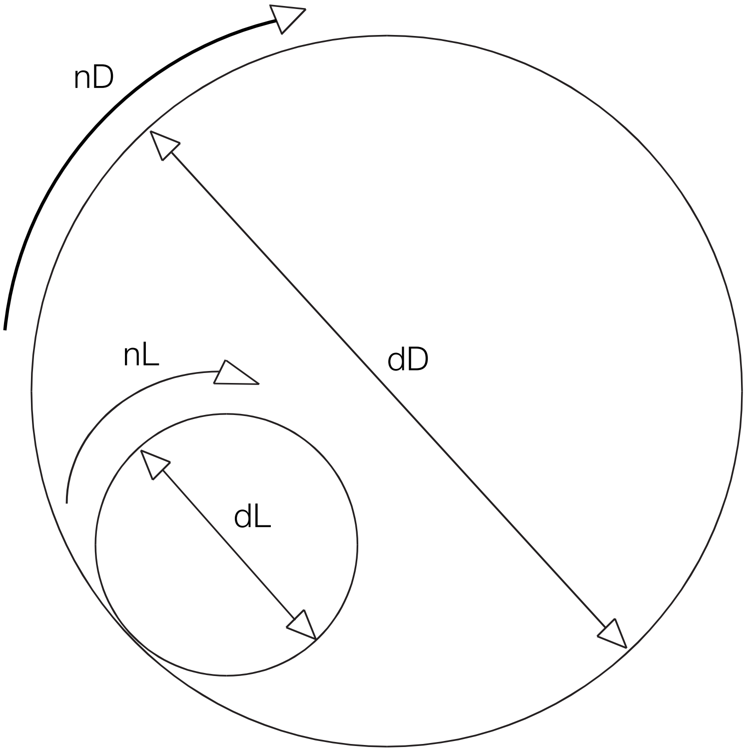

$$nD = \frac{42.4}{dD} \times \sqrt{2\sqrt{\frac{VL}{\pi \times h}}}$$

dD = inner diameter of drum in m

VL = weight of load in 1000 kg

h = inner width of drum in m

π = 3.14

nD = drum speed (r.p.m.) at which the optimum dispersing or mixing effect is obtained with a specific load weight

nL = revolving speed of load bale (r.p.m.)

dL = diameter of load bale formed during drumming

Example: width of drum 3.0 m; diameter of drum 3.0 m; total load 4,0 t

$$\frac{42.4}{3.0} \times \sqrt{2\sqrt{\frac{4.0\ \text{t}}{3.14 \times 3{,}0}}} = 16\ \text{r.p.m.}$$

Tables for determining the correct nominal diameters of air pressure reducers and water separators in compressed air spraying units

Proper dehumidification of the spraying air and maintenance of a constant working pressure can be ensured only when the air flow rate in the pressure reducer and water separator lies between 10 and 20 m/s, and the nominal diameters of their connections must therefore be accordingly. The nominal diameters of the connections can be determined by first ascertaining the maximum air consumption in m^3/h with the aid of the diagrams A or B, depending on the type of jet used. The required nominal diameter in inch can then be found in diagram C within the grey dotted zone straight above the abscissa on which the air consumption is indicated.

Examples:

1. Determination of air consumption using circular jet (diagram A).

   Air pressure: 3.5 bar
   Nozzle orifice: 1.8 mm = air consumption: about 13 m^3/h

2. Determination of nominal diameter (diagram C)
   The value straight above 13 m^3/h in the dotted grey zone representing the flow rate of 10 – 20 m/s is 3/4 inch.

Diagramm A

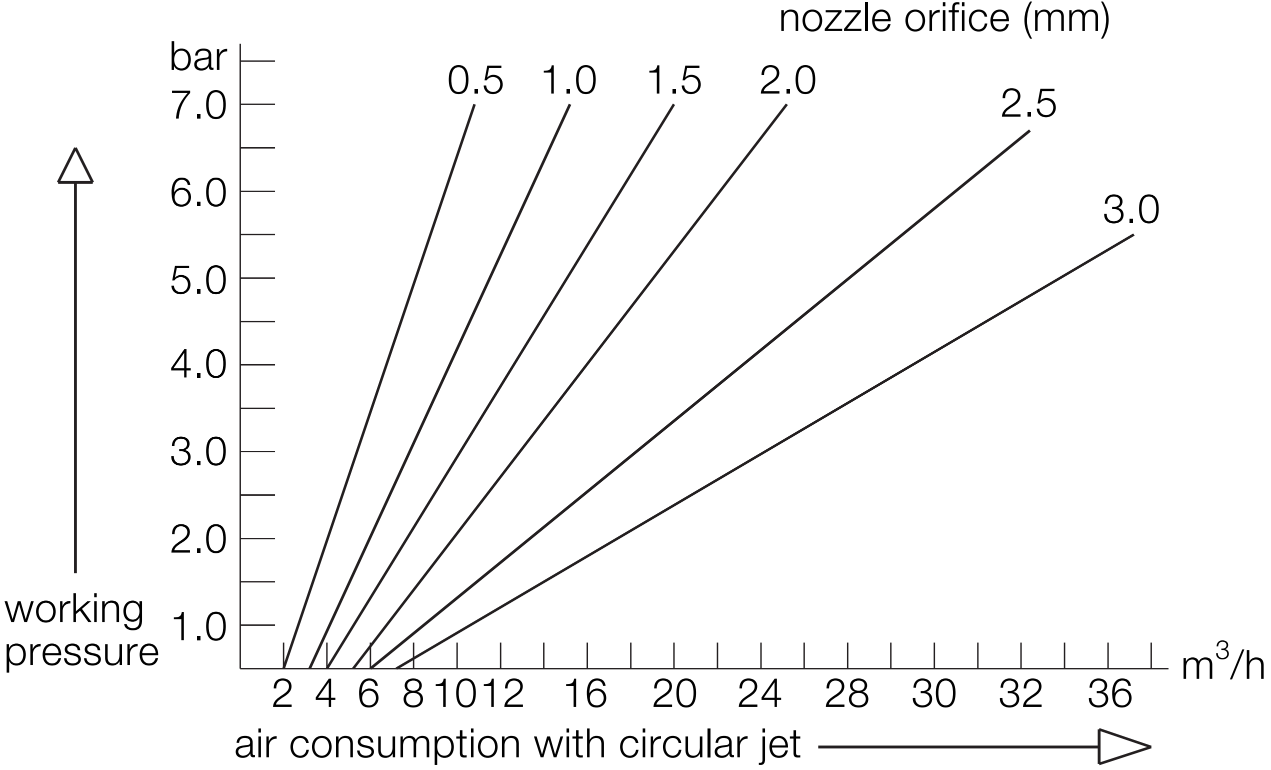

Diagramm B

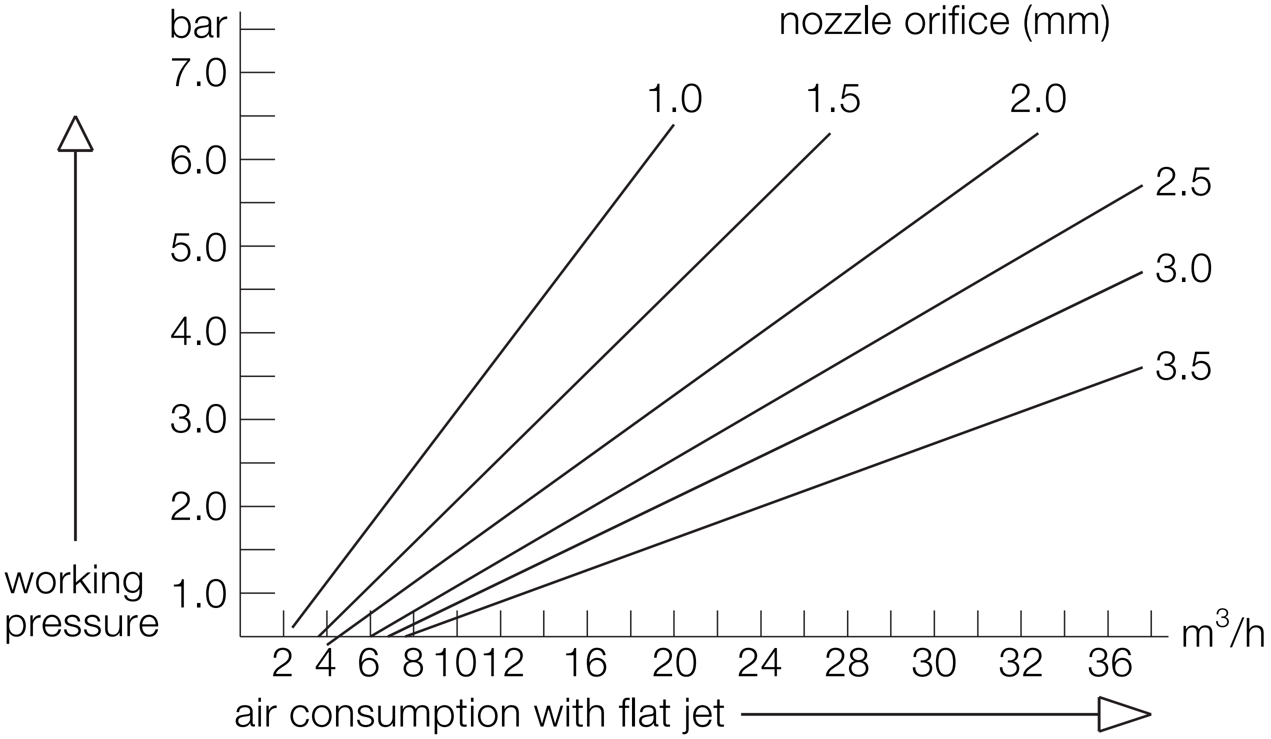

Diagram C

Required nominal diameter of pressure reducers and water separators

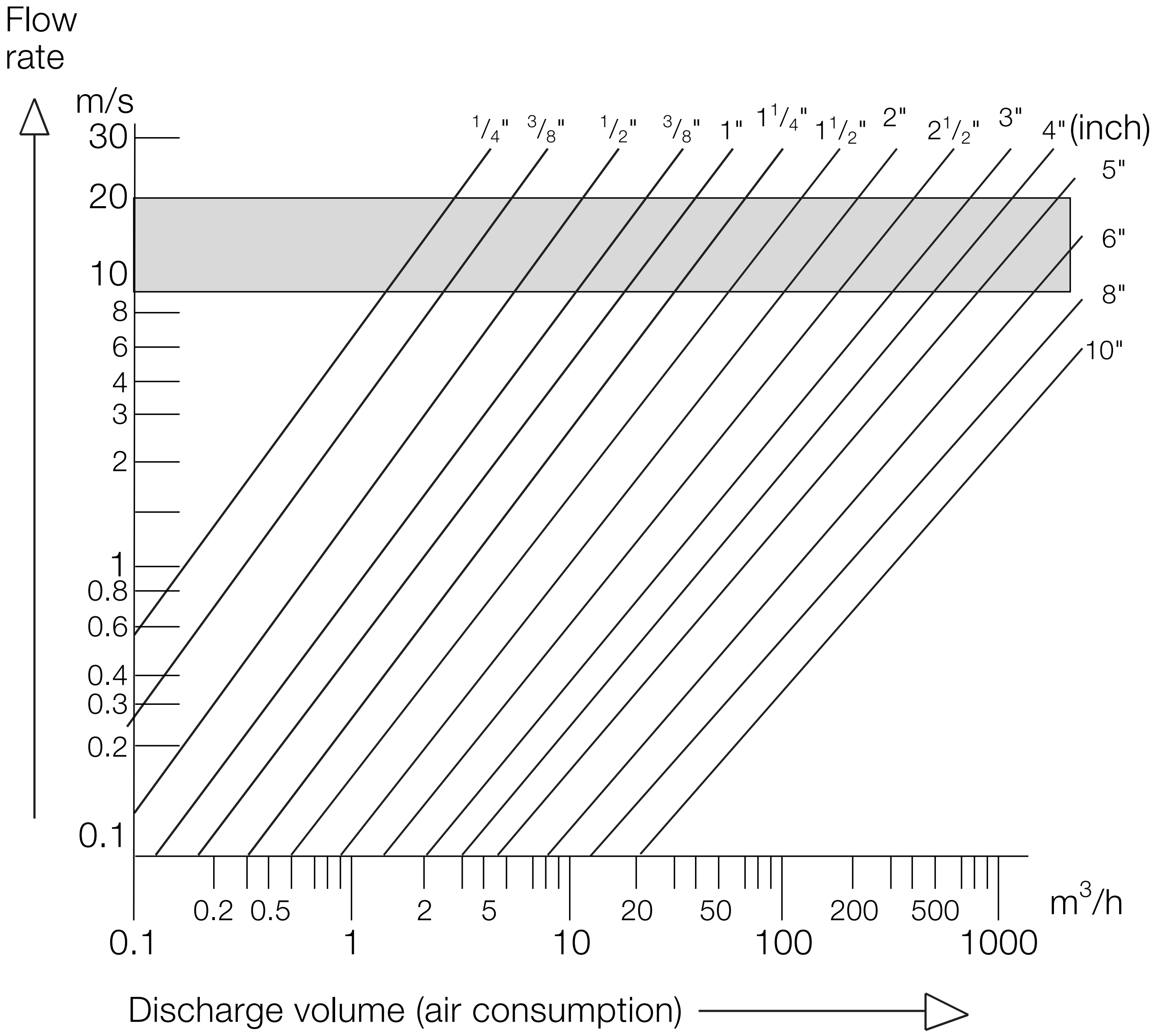

Conversion table for temperature readings

Conversion of		subtract	then multiply by	then divide by	then add
°C (Celsius)	to °F (Fahrenheit)	–	9	5	32
°C (Celsius)	to °R (Réaumur)	–	4	5	–
°F (Fahrenheit)	to °C (Celsius)	32	5	9	–
°F (Fahrenheit)	to °R (Réaumur)	32	4	9	–
°R (Réaumur)	to °C (Celsius)	–	5	4	–
°R (Réaumur)	to °F (Fahrenheit)	–	9	4	32

Temperature conversion table

°C β{	°F		°C β{	°F	
	°C {γ	°F		°C {γ	°F
–34.5	–30	–22.0	–17.8	0	32.0
–31.7	–25	–13.0	–17.2	+1	33.8
–28.9	–20	–4.0	–16.7	2	35.6
–26.1	–15	+ 5.0	–16.1	3	37.4
–23.3	–10	14.0	–15.6	4	39.2
–22.7	–9	15.8	–15.0	5	41.0
–22.2	–8	17.6	–14.4	6	42.8
–21.6	–7	19.4	–13.9	7	44.6
–21.1	–6	21.2	–13.3	8	46.4
–20.5	–5	23.0	–12.8	9	48.2
–20.0	–4	24.8	–12.2	10	50.0
–19.4	–3	26.6	–11.7	11	51.8
–18.9	–2	28.4	–11.1	12	53.6
–18.3	–1	30.2	–10.6	13	55.2

Temperature conversion table

°C β {	°F		°C β {	°F	
	°C { γ	°F		°C { γ	°F
–10.0	14	57.4	8.9	48	118.4
–9.5	15	59.0	9.5	49	120.2
–8.9	16	60.8	10.0	50	122.0
–8.3	17	62.6	10.6	51	123.8
–7.8	18	64.4	11.1	52	125.6
–7.2	19	66.2	11.7	53	127.4
–6.7	20	68.0	12.2	54	129.2
–6.1	21	69.8	12.8	55	131.0
–5.6	22	71.6	13.3	56	132.8
–5.0	23	73.4	13.9	57	134.6
–4.5	24	75.2	14.4	58	136.4
–3.9	25	77.0	15.0	59	138.2
–3.4	26	78.8	15.6	60	140.0
–2.8	27	80.6	16.1	61	141.8
–2.3	28	82.4	16.7	62	143.6
–1.7	29	84.2	17.2	63	145.4
–1.1	30	86.0	17.8	64	147.2
–0.6	31	87.8	18.3	65	149.0
±0	32	89.6	18.9	66	150.8
0.6	33	91.4	19.4	67	152.6
1.1	34	93.2	20.0	68	154.4
1.7	35	95.0	20.6	69	156.2
2.3	36	96.8	21.1	70	158.0
2.8	37	98.6	21.6	71	159.8
3.4	38	100.4	22.2	72	161.6
3.9	39	102.2	22.7	73	163.4
4.5	40	104.0	23.3	74	165.2
5.0	41	105.8	23.9	75	167.0
5.6	42	107.6	24.4	76	168.8
6.1	43	109.4	25.0	77	170.6
6.7	44	111.2	25.6	78	172.4
7.2	45	113.0	26.1	79	174.2
7.8	46	114.8	26.7	80	176.0
8.3	47	116.6	27.2	81	177.8

Temperature conversion table

°C β{	°F		°C β{	°F	
	°C {γ	°F		°C {γ	°F
27.8	82	179.6	46.7	116	240.8
28.3	83	181.4	47.2	117	242.6
28.9	84	183.2	47.8	118	244.4
29.4	85	185.0	48.3	119	246.2
30.0	86	186.8	48.9	120	248.0
30.6	87	188.6	49.4	121	249.8
31.1	88	190.4	50.0	122	251.6
31.7	89	192.2	50.6	123	253.4
32.2	90	194.0	51.1	124	255.2
32.8	91	195.8	51.7	125	257.0
33.3	92	197.6	52.2	126	258.8
33.9	93	199.4	52.8	127	260.6
34.4	94	201.2	53.3	128	262.4
35.0	95	203.0	53.9	129	264.2
35.6	96	204.8	54.4	130	266.0
36.1	97	206.6	55.0	131	267.8
36.7	98	208.4	55.5	132	269.6
37.2	99	210.2	56.1	133	271.4
37.8	100	212.0	56.6	134	273.2
38.3	101	213.8	57.2	135	275.0
38.9	102	215.6	57.7	136	276.8
39.4	103	217.4	58.3	137	278.6
40.0	104	219.2	58.8	138	280.4
40.6	105	221.0	59.4	139	282.2
41.1	106	222.8	60.0	140	284.0
41.7	107	224.6	60.5	141	285.8
42.2	108	226.4	61.1	142	287.6
42.8	109	228.2	61.6	143	289.4
43.3	110	230.0	62.2	144	291.2
43.9	111	231.8	62.7	145	293.0
44.4	112	233.6	63.3	146	294.8
45.0	113	235.4	63.8	147	296.6
45.6	114	237.2	64.4	148	298.4
46.1	115	239.0	65.0	149	300.2

Temperature conversion table

°C β {	°F		°C β {	°F	
	°C { γ	°F		°C { γ	°F
65.5	150	302.0	84.4	184	363.2
66.1	151	303.8	85.0	185	365.0
66.6	152	305.6	85.6	186	366.8
67.2	153	307.4	86.1	187	368.6
67.7	154	309.2	86.7	188	370.4
68.3	155	311.0	87.2	189	372.2
68.8	156	312.8	87.8	190	374.0
69.4	157	314.6	88.3	191	375.8
70.0	158	316.4	88.9	192	377.6
70.5	159	318.2	89.4	193	379.4
71.0	160	320.0	90.0	194	381.2
71.6	161	321.8	90.5	195	383.0
72.2	162	323.6	91.1	196	384.8
72.7	163	325.4	91.6	197	386.6
73.3	164	327.2	92.2	198	388.4
73.8	165	329.0	92.7	199	390.2
74.4	166	330.8	93.3	200	392.0
75.0	167	332.6	93.9	201	393.8
75.5	168	334.4	94.4	202	395.6
76.1	169	336.2	95.0	203	397.4
76.6	170	338.0	95.6	204	399.2
77.2	171	339.8	96.1	205	401.0
77.7	172	341.6	96.7	206	402.8
78.3	173	343.4	97.2	207	404.6
78.8	174	345.2	97.8	208	406.4
79.3	175	347.0	98.3	209	408.2
79.9	176	348.8	98.9	210	410.0
80.5	177	350.6	99.4	211	411.8
81.0	178	352.4	100.0	212	413.6
81.6	179	354.2			
82.1	180	356.0			
82.7	181	357.8			
83.3	182	359.6			
83.9	183	361.4			

Conversion table for density and Baumé, barkometer and twaddle hydrometer readings

0 °Bé = density of distilled water at 15 °C
10 °Bé = density of a 10 % solution of common salt
66 °Bé = density of concentrated sulfuric acid

$$\text{degrees Baumé} = \frac{144.38\,(\text{density} - 1)}{\text{density}}$$

$$\text{degrees barkometer} = 1000\,(\text{density} - 1)$$

$$\text{degrees twaddle} = 200\,(\text{density} - 1)$$

Baumé	Bark.	Twaddle	Density g/cm^3
0.1	0.7	0.14	1.0007
0.2	1.4	0.28	1.0014
0.3	2.0	0.40	1.0020
0.4	2.7	0.54	1.0027
0.5	3.4	0.69	1.0034
0.6	4.1	0.82	1.0041
0.7	4.8	0.96	1.0048
0.8	5.5	1.10	1.0055
0.9	6.2	1.24	1.0062
1.0	6.9	1.38	1.0069
1.1	7.6	1.52	1.0076
1.2	8.2	1.64	1.0082
1.3	8.9	1.78	1.0089
1.4	9.6	1.92	1.0096
1.5	10.3	2.06	1.0103
1.6	11.0	2.20	1.0110
1.7	11.7	2.34	1.0117
1.8	12.4	2.48	1.0124
1.9	13.1	2.62	1.0131
2.0	13.8	2.76	1.0138
2.5	17.3	3.46	1.0173
3.0	20.9	4.18	1.0209
3.5	24.4	4.88	1.0244
4.0	28.0	5.6	1.0280
4.5	31.6	6.3	1.0316
5.0	35.3	7.1	1.0353
5.5	38.9	7.8	1.0389
6.0	42.6	8.6	1.0426
6.5	46.3	9.3	1.0463
7.0	50.1	10.2	1.0501
7.5	53.9	10.8	1.0539
8.0	57.6	11.6	1.0576
8.5	61.5	12.3	1.0615
9.0	65.3	13.1	1.0653
9.5	69.2	13.9	1.0692
10.0	73.1	14.6	1.0731
11	81.0	16.2	1.0810
12	89.0	17.8	1.0890
13	97.1	19.5	1.0971
14	105.4	21.1	1.1054
15	113.8	22.8	1.1138
16	122.3	24.6	1.1223
17	131.0	26.2	1.1310
18	139.8	27.9	1.1398
19	148.7	29.8	1.1487
20	157.8	31.6	1.1578

Density			
Baumé	Bark.	Twaddle	g/cm^3
21	167.0	33.4	1.1670
22	176.3	35.3	1.1763
23	185.8	37.2	1.1858
24	195.5	39.1	1.1955
25	205.3	41.1	1.2053
26	215.3	43.1	1.2153
27	225.4	45.1	1.2254
28	235.7	47.2	1.2357
29	246.2	49.3	1.2462
30	256.9	51.4	1.2569
30.6	270	54	1.2700
31.5	280	56	1.2800
32.4	290	58	1.2900
33.3	300	60	1.3000
34.2	310	62	1.3100
35.0	320	64	1.3200
35.8	330	66	1.3300
36.6	340	68	1.3400
37.4	350	70	1.3500
38.2	360	72	1.3600
39.0	370	74	1.3700
39.8	380	76	1.3800
40.5	390	78	1.3900
41.2	400	80	1.4000
42.0	410	82	1.4100
42.7	420	84	1.4200
43.4	430	86	1.4300
44.1	440	88	1.4400
44.8	450	90	1.4500
45.4	460	92	1.4600
46.1	470	94	1.4700
46.8	480	96	1.4800
47.4	490	98	1.4900
48.1	500	100	1.5000
48.7	510	102	1.5100
49.4	520	104	1.5200
50.0	530	106	1.5300
50.6	540	108	1.5400
51.2	550	110	1.5500
51.8	560	112	1.5600
52.4	570	114	1.5700
53.0	580	116	1.5800
53.6	590	118	1.5900
54.1	600	120	1.6000
54.7	610	122	1.6100
55.2	620	124	1.6200
55.8	630	126	1.6300
56.3	640	128	1.6400
56.9	650	130	1.6500
57.4	660	132	1.6600
57.9	670	134	1.6700
58.4	680	136	1.6800
58.9	690	138	1.6900
59.5	700	140	1.7000
60.0	710	142	1.7100
60.4	720	144	1.7200
60.9	730	146	1.7300
61.4	740	148	1.7400
61.8	750	150	1.7500
62.3	760	152	1.7600
62.8	770	154	1.7700
63.2	780	156	1.7800
63.7	790	158	1.7900
64.2	800	160	1.8000
64.6	810	162	1.8100
65.0	820	164	1.8200
65.5	830	166	1.8300
65.9	840	168	1.8400

Rules for mixing

If two solutions of different concentration of one substance have to be mixed together to give a solution of any desired concentration, the following procedure is adopted to calculate the proportion of each. The desired concentration is subtracted from the higher concentration to give the proportion of solution with the lower concentration; and the lower concentration is subtracted from the desired concentration to give the proportion of solution with the higher concentration.

Example No. 1
Solutions of 96 % and 75 % concentration are to be mixed together to give a solution of 80 % concentration.
96 – 80 = 16 parts = proportion of 75 % solution
80 – 75 = 5 parts of 96 % solution

Example No. 2
A solution of 96 % concentration has to be mixed with pure solvent (0 % concentration) to give a solution of 40 % concentration.
96 – 40 = 56 parts = proportion of solvent
40 – 0 = 40 parts = proportion of 96 solution

Example No. 1

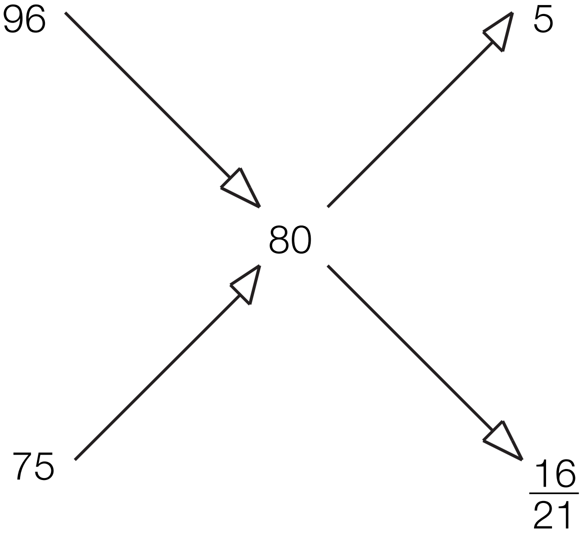

Example No. 2

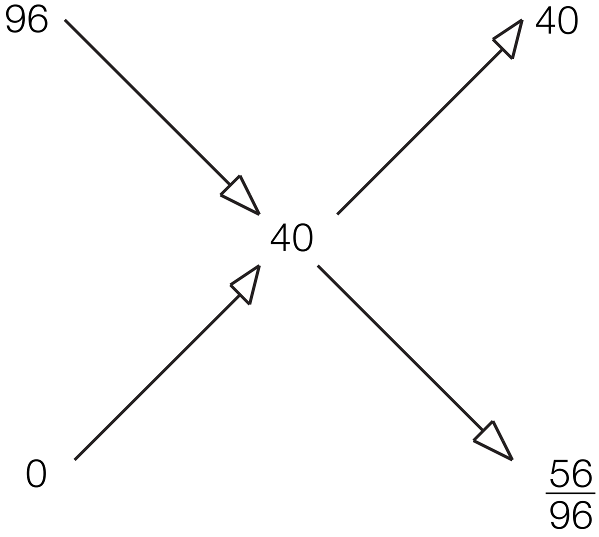

If the concentrations are expressed in percentages by weight, the proportions obtained by the above method represent parts by weight. If the concentrations are expressed in % vol., the proportions represent parts by volume.

An analogous procedure can be adopted to prepare solutions of a given density.

Symbol, atomic number and atomic weight of elements

Name	Symbol	Atomic number	Atomic weight
Actinium	Ac	89	(227)
Aluminium	Al	13	27.0
Americium	Am	95	(243)
Antimony	Sb	51	121.8
Argon	Ar	18	39.9
Arsenic	As	33	74.9
Astatine	At	85	(210)
Barium	Ba	56	137.3
Berkelium	Bk	97	(247)
Beryllium	Be	4	9.0
Bismuth	Bi	83	209.0
Boron	B	5	10.8
Bromine	Br	35	79.9
Cadmium	Cd	48	112.4
Calcium	Ca	20	40.1
Californium	Cf	98	(251)
Carbon	C	6	12.0
Cerium	Ce	58	140.1
Cesium	Cs	55	132.9
Chlorine	Cl	17	35.5
Chromium	Cr	24	52.0
Cobalt	Co	27	58.9
Copper	Cu	29	63.5
Curium	Cm	96	(247)
Dysprosium	Dy	66	162.5
Einsteinium	Es	99	(254)
Erbium	Er	68	167.3
Europium	Eu	63	152.0
Fermium	Fm	100	(257)
Fluorine	F	9	19.0
Francium	Fr	87	(223)

Symbol, atomic number and atomic weight of elements

Name	Symbol	Atomic number	Atomic weight
Gadolinium	Gd	64	157.3
Gallium	Ga	31	69.7
Germanium	Ge	32	72.6
Gold	Au	79	197.0
Hafnium	Hf	72	178.5
Helium	He	2	4.0
Holmium	Ho	67	164.9
Hydrogen	H	1	1.0
Indium	In	49	114.8
Iodine	I	53	126.9
Iridium	Ir	77	192.2
Iron	Fe	26	55.8
Krypton	Kr	36	83.8
Lanthanum	La	57	138.9
Lead	Pb	82	207.2
Lithium	Li	3	6.9
Lutetium	Lu	71	175.0
Magnesium	Mg	12	24.3
Manganese	Mn	25	54.9
Mendelevium	Md	101	(258)
Mercury	Hg	80	200.6
Molybdenum	Mo	42	95.9
Neodymium	Nd	60	144.2
Neon	Ne	10	20.2
Neptunium	Np	93	(237)
Nickel	Ni	28	58.7
Niobium	Nb	41	92.9
Nitrogen	N	7	14.0
Nobelium	No	102	(254)
Osmium	Os	76	190.2
Oxygen	O	8	16.0

Symbol, atomic number and atomic weight of elements

Name	Symbol	Atomic number	Atomic weight
Palladium	Pd	46	106.4
Phosphorus	P	15	31.0
Platinum	Pt	78	195.1
Plutonium	Pu	94	(244)
Polonium	Po	84	(210)
Potassium	K	19	39.1
Praseodymium	Pr	59	140.9
Promethium	Pm	61	(145)
Protactinium	Pa	91	(231)
Radium	Ra	88	(226)
Radon	Rn	86	(222)
Rhenium	Re	75	186.2
Rhodium	Rh	45	102.9
Rubidium	Rb	37	85.5
Ruthenium	Ru	44	101.1
Samarium	Sm	62	150.4
Scandium	Sc	21	45.0
Selenium	Se	34	79.0
Silicon	Si	14	28.1
Silver	Ag	47	107.9
Sodium	Na	11	23.0
Strontium	Sr	38	87.6
Sulfur	S	16	32.1
Tantalum	Ta	73	180.9
Technetium	Tc	43	(99)
Tellurium	Te	52	127.6
Terbium	Tb	65	158.9
Thallium	Tl	81	204.4
Thorium	Th	90	232.0
Thulium	Tm	69	168.9
Tin	Sn	50	118.7
Titanium	Ti	22	47.9
Tungsten	W	74	183.9
Uranium	U	92	238.0

Symbol, atomic number and atomic weight of elements

Name	Symbol	Atomic number	Atomic weight
Vanadium	V	23	50.9
Xenon	Xe	54	131.3
Ytterbium	Yb	70	173.0
Yttrium	Y	39	88.9
Zinc	Zn	30	65.4
Zirconium	Zr	40	91.2

The atomic weights indicated in brackets are the isotopes of the element with the greatest half-life period.

Molecular weight, formula and solubility in water of some chemical compounds

Chemical compound	Formula	Molecular weight	Solubility/1 litre H_2O, 20 °C/ in g
Acetic acid	CH_3COOH	60.1	–
Acetone	CH_3-CO-CH_3	58.1	–
Aluminium chloride	$AlCl_3 \cdot 6H_2O$	241.4	450 (readily soluble)
Aluminium hydroxide	$Al(OH)_3$	78.0	– (practically insoluble)
Aluminium oxide	Al_2O_3	102.0	insoluble
Aluminium sulfate	$Al_2\ (SO_4)_3 \cdot 18H_2O$	666.4	363 (readily soluble)
Ammonia (gas)	NH_3	17.0	very readily soluble
Ammonia (solution)	NH_4OH	35.0	(23 % NH_3 content)
Ammonium chloride	NH_4Cl	53.5	374 (readily soluble)
Ammonium sulfate	$(NH_4)_2\ SO_4$	132.1	754 (very readily soluble)
Barium chloride	$BaCl_2 \cdot 2H_2O$	244.3	357
Barium sulfate	$BaSO_4$	233.4	insoluble
Borax (sodium tetraborate)	$Na_2B_4O_7 \cdot 10H_2O$	381.4	~ 20 (readily hot soluble)
Boric acid	H_3BO_3	61.8	49
Calcium carbonate	$CaCO_3$	100.1	insoluble
Calcium chloride calc.	$CaCl_2$	111.0	readily soluble

Molecular weight, formula and solubility in water of some chemical compounds

Chemical compound	Formula	Molecular weight	Solubility/1 litre H_2O, 20 °C/ in g
Calcium chloride cryst.	$CaCl_2 \cdot 6H_2O$	219.1	745
Calcium formate	$Ca(HCOO)_2$	130.1	soluble
Calcium hydroxide	$Ca(OH)_2$	74.1	1.3 (difficult soluble)
Calcium oxide	CaO	56.1	with H_2O $Ca(OH)_2$
Carbon disulfide	CS_2	76.1	2
Chrome alum	$KCr(SO_4)_2 \cdot 12H_2O$	499.4	~ 240
Chromium chloride	$CrCl_3$	158.4	readily soluble
Chromium hydroxide	$Cr(OH)_3$	103.0	insoluble
Chromium sulfate	$Cr_2\ (SO_4)_3 \cdot 18H_2O$	716.5	1200
Copper sulfate	$CuSO_4 \cdot 5H_2O$	249.7	350
Dimethylamine	$(CH_3)_2NH$	45.1	readily soluble
Ethyl alcohol (ethanol)	C_2H_5OH	46.1	–
Formaldehyde	$HCHO$	30.0	soluble (formaldehyde)
Formic acid	$HCOOH$	46.0	–
Glucose	$C_6H_{12}O_6$	180.2	~ 850 (readily soluble)
Glutaraldehyde	$CHO\text{-}(CH_2)_3\text{-}CHO$	100.1	soluble
Glyoxal	$C_2H_2O_2$	58.0	soluble

Molecular weight, formula and solubility in water of some chemical compounds

Chemical compound	Formula	Mole-cular weight	Solubility/1 litre H_2O, 20 °C/ in g
Hexamethylene tetramine	$C_6H_{12}N_4$	140.2	~ 820
Hydrochloric acid	HCl	36.5	–
Hydrogen peroxide	H_2O_2	34.0	miscible
Hydrogen sulfide	H_2S	34.1	considerably soluble
Iron alum	$KFe\ (SO_4)_2 \cdot 12H_2O$	503.1	soluble
Iron(III) chloride	$Fe\ Cl_3 \cdot 6H_2O$	270.3	919
Iron(III) sulfate	$Fe_2\ (SO_4)_3 \cdot 9H_2O$	562.1	440
Iron(II) sulfate	$Fe\ SO_4 \cdot 7H_2O$	278.1	156.5
Iron(III) oxide	Fe_2O_3	159.7	insoluble
Iron(II) oxide	FeO	71.8	insoluble
Lactic acid	CH_3-CHOH-COOH	90.1	–
Lead acetate	$Pb(OOCCH_3)_2 \cdot 3H_2O$	379.3	460
Lead(II) sulfate	$PbSO_4$	303.3	insoluble
Magnesium chloride	$MgCl_2 \cdot 6H_2O$	203.3	542
Magnesium oxide	MgO	40.3	soluble in acids
Magnesium sulfate	$MgSO_4 \cdot 7H_2O$	246.5	356
Nitric acid	HNO_3	63.0	–

Molecular weight, formula and solubility in water of some chemical compounds

Chemical compound	Formula	Molecular weight	Solubility/1 litre H_2O, 20 °C/ in g
Oxalic acid	$(COOH)_2$	90.0	96.4
Phenol	C_6H_6O	94.1	–
Phthalic acid	$C_8H_6O_4$	166.1	5.7
Potash alum	$KAl(SO_4)_2 \cdot 12H_2O$	474.4	114
Potassium carbonate	K_2CO_3	138.2	1115
Potassium chloride	KCl	74.5	344
Potassium dichromate	$K_2Cr_2O_7$	294.2	123
Potassium hydroxide	KOH	56.1	1114
Potassium permanganate	$KMnO_4$	158.0	64
Sodium acetate	$NaOOC\text{-}CH_3 \cdot 3H_2O$	136.1	~ 800
Sodium bicarbonate	$NaHCO_3$	84.0	96
Sodium dichromate	$Na_2Cr_2O_7 \cdot 2H_2O$	298.0	~ 2400
Sodium bisulfite	$NaHSO_3$	104.1	very readily soluble
Sodium carbonate calc.	Na_2CO_3	106.0	readily soluble
Sodium carbonate cryst.	$Na_2CO_3 \cdot 10H_2O$	286.1	216
Sodium chloride	$NaCl$	58.4	359

Molecular weight, formula and solubility in water of some chemical compounds

Chemical compound	Formula	Molecular weight	Solubility/1 litre H_2O, 20 °C/ in g
Sodium chlorite	$NaClO_2$	90.4	~ 600
Sodium formate	HCOO Na	68.0	readily soluble
Sodium hexametaphosphate	$Na_6\ (PO_3)_6$	611.1	soluble
Sodium hydrosulfite	$Na_2S_2O_4 \cdot 2H_2O$	210.2	254
Sodium hydroxide	NaOH	40.0	1070
Sodium nitrite	$NaNO_2$	69.0	~ 830
Sodium phosphate (mono)	$NaH_2PO_4 \cdot H_2O$	138.0	1103
Sodium phosphate (di.)	$Na_2HPO_4 \cdot 12H_2O$	358.2	~ 700
Sodium phosphate (tri)	$Na_3PO_4 \cdot 12H_2O$	380.1	258
Sodium sulfate (cryst.)	$Na_2SO_4 \cdot 10H_2O$	322.2	191
Sodium sulfate (powder)	Na_2SO_4	142.1	readily soluble
Sodium sulfide (cryst.)	$Na_2S \cdot 9H_2O$	240.2	475 (10 °C)
Sodium sulfide (powder)	Na_2S	78.1	154 (10 °C)
Sodium sulfite	Na_2SO_3	126.0	readily soluble

Molecular weight, formula and solubility in water of some chemical compounds

Chemical compound	Formula	Molecular weight	Solubility/1 litre H_2O, 20 °C/ in g
Sodium sulfhydrate	$NaSH$	56.0	readily soluble
Sodium thiosulfate	$Na_2S_2O_3 \cdot 5H_2O$	248.2	700
Sulfuric acid	H_2SO_4	98.1	–
Tartaric acid	$C_4H_6O_6$	150.1	~ 140
Titanium dioxide	TiO_2	79.9	insoluble
Urea	$(NH_2)_2 \cdot CO$	60.1	~ 800
Zinc chloride	$ZnCl_2$	136.3	367
Zinc sulfate	$ZnSO_4 \cdot 7H_2O$	287.5	538
Zirconium dioxide	ZrO_2	123.1	insoluble
Zirconium sulfate	$Zr(SO_4)_2 \cdot 4H_2O$	355.4	soluble

Production of a certain relative humidity

The salts listed below can produce a certain relative humidity at 20 °C through their saturated, aqueous solutions, which must still contain solid salt at the bottom.

Relative humidity	Product
98 %	Lead nitrate, $Pb\ (NO_3)_2$
97 %	Potassium sulfate, K_2SO_4
95 %	Sec. sodium phosphate, $Na_2HPO_4 \cdot 12H_2O$
93 %	Primary ammonium phosphate, $NH_4H_2PO_4$
92 %	Cryst. soda, $Na_2CO_3 \cdot 10H_2O$
88 %	Potassium chromate, K_2CrO_4
86 %	Potassium chloride, KCl, or Potassium bisulfate, $KHSO_4$
84 %	Potassium bromide, KBr
81 %	Ammonium sulfate, $(NH_4)_2\ SO_4$
79 %	Ammonium chloride, NH_4Cl
76 %	Cryst. sodium acetate, $CH_3COONa \cdot 3H_2O$
75 %	Sodium chloride, NaCl or Sodium chlorate, $NaClO_3$
66 %	Sodium nitrite, $NaNO_2$
65 %	Ammonium nitrate, NH_4NO_3
58 %	Cryst. sodium bromide, $NaBr \cdot 2H_2O$
56 %	Magnesium nitrate, $Mg(NO_3)_2 \cdot 6H_2O$
55 %	Calcium nitrate, $Ca(NO_3)_2$
52 %	Sodium dichromate, $Na_2Cr_2O_7 \cdot 2H_2O$
47 %	Potassium rhodanide, KSCN
45 %	Potassium carbonate, $K_2CO_3 \cdot 2H_2O$
42 %	Cryst. zinc nitrate, $Zn(NO_3)_2 \cdot 6H_2O$
35 %	Cryst. calcium chloride, $CaCl_2 \cdot 6H_2O$
31 %	Cryst. copper-II-chloride, $CuCl_2 \cdot 6H_2O$
20 %	Potassium acetate, CH_3COOK
15 %	Lithium chloride, $LiCl \cdot H_2O$

Definition of mixtures of substances

Dispersion	Heterogeneous mixture of substances in which one phase in form of particles is dispersed more or less finely in another phase, the dispersing agent = disperse system. *1. Colloidal disperse system:* Particle sizes 10^{-9} ... 5×10^{-7} m. a. *Sol* = colloidal solution. b. *Gel* = gelatinous substance. Sols can be converted into gels by coagulation. Some gels can be converted into sols by peptisation. *2. Coarsely disperse system:* Particle size $> 5 \times 10^{-7}$ m.
Emulsion	Heterogeneous mixture of two or more liquid substances.
Mixture	Substances consisting of two ore more substances produced by physical processes (not by chemical reactions). *1. Homogeneous mixture:* Mixtures whose constituents are not distinguishable even by viewing under a microscope, e.g., true solutions. *2. Heterogeneous mixture:* a. Mixture consisting of two or more phases which are separated from one another at least by microscopically distinguishable separating surfaces. b. Like heterogeneous mixtures, but one phase is finely dispersed in another phase, the dispersing agent.
Solution	*1. True solution:* Homogeneous mixture of two or more substances. Particle size of the dissolved substances $<10^{-9}$ m. *2. Colloidal solution:* Heterogeneous mixture of substances. Particle sizes 10^{-9} …5×10^{-7} m.
Phase	Homogeneous portion of a heterogeneous mixture.
Suspension	Heterogeneous mixture of solid and liquid substances.
Foam	Heterogeneous mixture of gases and liquids.

Terms expressing interaction with water

Moistness	Liquids held or deposited in a solid.
Absorption	The action of a material in taking up water vapour and retaining it throughout its structure.
Adsorption	The adhesion of water vapour to the outer and inner surfaces of a material.
Sorption	The action of a material in taking up water and/or water vapour. Absorption and adsorption may overlap when water vapour is taken up from the air.
Desorption	The action of a material in giving off (usually) absorbed and/or adsorbed water vapour to the surrounding atmosphere.
Moistness equilibrium	State of equilibrium between moistness content of a material and relative humidity.
Mass of moistness	Mass of a moist material (including liquids).
Moistness (water) content	Moistness (water) content in relation to mass of moistness.
Moistness ratio	Moistness in relation to dry solids.
Relative change of moistness	Difference of moistness of a material after drying or moistening in relation to the mass of moistness at the outset.
Dry solids	Solids in a material free from moistness.
Commercial grades	Solids content including defined (usually maximum permissible) moistness according to commercial practice.
Normal moist or dry state	State of a solid conditioned under standard climatic conditions to constant mass weight.
Air-dry state	Like normally dry state but strict adherence to conditioning under standard climatic conditions to constant mass weight is not required.

Density and conversion tables

Alkalis

Density and concentration of **caustic soda solution** (NaOH) 20°/4 °C

% NaOH	g per litre	Density (g/cm^3)	° Bé	lbs per cubic foot	lbs per gallon
1	10.10	1.0095	1.4	0.6302	0.0842
2	20.41	1.0207	2.9	1.274	0.1704
3	30.95	1.0318	4.5	1.932	0.2583
4	41.71	1.0428	6.0	2.604	0.3481
5	52.69	1.0538	7.4	3.280	0.4397
6	63.89	1.0648	8.8	3.988	0.5332
7	75.31	1.0758	10.2	4.701	0.6284
8	86.95	1.0869	11.6	5.428	0.7256
9	98.81	1.0979	12.9	6.168	0.8246
10	110.9	1.1089	14.2	6.923	0.9254
12	135.7	1.1309	16.8	8.472	1.133
14	161.4	1.1530	19.2	10.08	1.347
16	188.0	1.1751	21.6	11.74	1.569
18	215.5	1.1972	23.9	13.45	1.798
20	243.8	1.2191	26.1	15.22	2.035
22	273.0	1.2411	28.2	17.05	2.279
24	303.1	1.2629	30.2	18.92	2.529
26	334.0	1.2848	32.1	20.85	2.788
28	365.8	1.3064	34.0	22.84	3.053
30	398.4	1.3279	35.8	24.87	3.324
32	431.7	1.3490	37.5	26.95	3.602
34	465.7	1.3696	39.1	29.07	3.886
36	500.4	1.3900	40.7	31.24	4.176
38	535.8	1.4101	42.2	33.45	4.472
40	572.0	1.4300	43.6	35.71	4.773
42	608.7	1.4494	45.0	38.00	5.080
44	646.1	1.4685	46.3	40.34	5.392
46	684.2	1.4873	47.5	42.71	5.709
48	723.1	1.5065	48.8	45.14	6.035
50	762.7	1.5253	49.9	47.61	6.364

Density/alkalis

Density and concentration of **ammonia** (NH_4OH) aqueous solution

Density g/cm³	% NH_3	g/l NH_3	Density g/cm³	% NH_3	g/l NH_3
1.0000	0.00	0.0	0.9428	14.90	141.7
0.9982	0.42	4.2	0.9412	15.37	145.1
0.9964	0.82	8.2	0.9336	15.84	149.4
0.9947	1.21	12.1	0.9389	16.32	153.6
0.9929	1.62	16.1	0.9365	16.80	158.7
0.9912	2.04	19.9	0.9349	17.28	163.3
0.9894	2.46	24.2	0.9333	17.76	167.9
0.9876	2.88	28.3	0.9318	18.24	172.5
0.9859	3.30	32.5	0.9302	18.72	177.1
0.9842	3.73	36.7	0.9287	19.20	181.6
0.9825	4.16	40.8	0.9272	19.68	185.7
0.9807	4.59	44.9	0.9256	20.16	190.1
0.9790	5.02	49.1	0.9241	20.64	194.3
0.9773	5.45	53.2	0.9226	21.12	198.8
0.9756	5.88	57.4	0.9211	21.60	203.1
0.9739	6.31	61.6	0.9195	22.08	207.4
0.9722	6.74	65.8	0.9180	22.56	211.9
0.9705	7.17	70.0	0.9165	23.04	216.2
0.9689	7.61	74.3	0.9150	23.52	220.7
0.9672	8.05	78.5	0.9135	24.01	225.3
0.9655	8.49	82.8	0.9121	24.50	229.8
0.9639	8.93	86.9	0.9106	24.99	234.4
0.9622	9.38	90.4	0.9091	25.48	238.9
0.9605	9.83	94.9	0.9076	25.97	243.2
0.9589	10.28	99.3	0.9061	26.46	247.6
0.9573	10.73	103.5	0.9032	27.44	253.1
0.9556	11.18	107.7	0.9003	28.42	258.7
0.9540	11.64	111.8	0.8974	29.40	264.2
0.9524	12.10	115.9	0.8946	30.38	269.6
0.9508	12.56	120.2	0.8917	31.36	275.9
0.9492	13.02	124.6	0.8889	32.34	281.5
0.9475	13.49	129.1	0.8861	33.32	287.7
0.9459	13.96	133.5	0.8833	34.30	294.5
0.9444	14.43	137.6	0.8805	35.28	301.4

Density and concentration of **soda ash** (Na_2CO_3) 20°/4 °C

% Na_2CO_3	g per litre	Density (g/cm^3)	° Bé	lbs per cubic foot	lbs per gallon
1	10.09	1.0086	1.2	0.6296	0.0842
2	20.38	1.0190	2.7	1.272	0.1701
4	41.59	1.0398	5.6	2.596	0.3471
6	64.64	1.0606	8.3	3.973	0.5311
8	86.53	1.0816	10.9	5.402	0.7221
10	110.3	1.1029	13.5	6.885	0.9204
12	134.9	1.1244	16.0	8.423	1.126
14	160.5	1.1463	18.5	10.02	1.339

Density and concentration **soda cryst.** ($Na_2CO_3 \cdot 10H_2O$) 20°/4 °C

% Na_2CO_3 10 H_2O	g per litre	Density (g/cm^3)	° Bé	lbs. per cubic foot	lbs. per gallon
2.7	27.23	1.0086	1.2	1.700	0.2272
5.4	55.02	1.0190	2.7	3.435	0.4592
10.8	112.3	1.0398	5.6	7.010	0.9370
16.2	171.8	1.0606	8.3	10.72	1.434
21.6	233.6	1.0816	10.9	14.58	1.949
27.0	297.7	1.1029	13.5	18.59	2.485
32.4	364.3	1.1244	16.0	22.74	3.040
37.8	433.3	1.1463	18.5	27.05	3.616

Equivalents of **soda ash** and **soda cryst.**

Soda ash [g]	Soda cryst. [g]	Soda ash [g]	Soda cryst. [g]	Soda ash [g]	Soda cryst. [g]
1	2.7	15	40.5	45	121.5
2	5.4	16	43.2	50	135.0
3	8.1	17	45.9	55	148.5
4	10.8	18	48.6	60	162.0
5	13.5	19	51.3	65	175.5
6	16.2	20	54.0	70	189.0
7	18.9	21	56.7	75	202.5
8	21.6	22	59.4	80	216.0
9	24.3	23	62.1	85	229.5
10	27.0	24	64.8	90	243.0
11	29.7	25	67.5	95	256.5
12	32.4	30	81.0	100	270.0
13	35.7	35	94.5		
14	37.8	40	108.0		

Acids

Density and concentration of **formic acid** (HCOOH) 20°/4 °C

% HCOOH	g per litre	Density (g/cm^3)	° Bé	lbs per cubic foot	lbs per gallon
1	10.02	1.0019	0.3	0.6255	0.0836
2	20.09	1.0044	0.6	1.254	0.1676
3	30.21	1.0070	1.0	1.886	0.2521
4	40.37	1.0093	1.3	2.520	0.3369
5	50.58	1.0115	1.6	3.157	0.4221
6	60.85	1.0141	2.0	3.798	0.5078
7	71.19	1.0170	2.4	4.444	0.5941
8	81.57	1.0196	2.8	5.092	0.6807
9	91.99	1.0221	3.1	5.743	0.7677
10	102.5	1.0246	3.5	6.396	0.8551
11	113.0	1.0271	3.8	7.053	0.9429
12	123.6	1.0296	4.2	7.713	1.031
13	134.2	1.0321	4.5	8.376	1.120
14	144.8	1.0345	4.8	9.041	1.209
15	155.6	1.0370	5.2	9.711	1.298
16	166.3	1.0393	5.5	10.38	1.388
17	177.1	1.0417	5.8	11.06	1.478
18	187.9	1.0441	6.1	11.73	1.568
19	198.8	1.0464	6.4	12.41	1.659
20	209.8	1.0488	6.8	13.09	1.750
21	220.8	1.0512	7.1	13.78	1.842
22	231.8	1.0537	7.4	14.47	1.935
23	242.9	1.0561	7.7	15.16	2.027
24	254.0	1.0585	8.0	15.86	2.120
25	265.2	1.0609	8.3	16.56	2.213
26	276.5	1.0633	8.6	17.26	2.307
27	287.7	1.0656	8.9	17.96	2.401
28	299.1	1.0681	9.3	18.67	2.496
29	310.4	1.0705	9.6	19.38	2.591
30	321.9	1.0729	9.9	20.09	2.686
31	333.3	1.0753	10.2	20.81	2.782
32	344.9	1.0777	10.5	21.53	2.878
33	356.4	1.0800	10.7	22.25	2.974
34	368.0	1.0823	11.0	22.97	3.071

Density and concentration of **formic acid** (HCOOH) 20°/4 °C

% HCOOH	g per litre	Density (g/cm^3)	° Bé	lbs. per cubic foot	lbs. per gallon
35	379.6	1.0847	11.3	23.70	3.168
36	391.4	1.0871	11.6	24.43	3.266
37	403.1	1.0895	11.9	25.17	3.364
38	414.9	1.0919	12.2	25.90	3.463
39	426.7	1.0940	12.5	26.64	3.561
40	438.5	1.0963	12.7	27.38	3.660
41	450.6	1.0990	13.1	28.13	3.760
42	462.6	1.1015	13.4	28.88	3.861
43	474.6	1.1038	13.6	29.63	3.961
44	486.7	1.1062	13.9	30.38	4.062
45	498.8	1.1085	14.2	31.14	4.163
46	511.0	1.1108	14.5	31.90	4.264
47	523.1	1.1130	14.7	32.66	4.365
48	535.5	1.1157	15.0	33.43	4.469
49	548.1	1.1185	15.4	34.21	4.574
50	560.4	1.1207	15.6	34.98	4.676
51	572.4	1.1223	15.8	35.73	4.777
52	584.7	1.1244	16.0	36.50	4.879
53	597.3	1.1269	16.3	37.28	4.984
54	609.9	1.1295	16.6	38.08	5.090
55	622.6	1.1320	16.9	38.87	5.196
56	635.2	1.1342	17.2	39.65	5.300
57	647.6	1.1361	17.4	40.43	5.404
58	660.1	1.1381	17.6	41.21	5.509
59	672.7	1.1401	17.8	41.99	5.613
60	685.4	1.1424	18.1	42.79	5.720
61	698.3	1.1448	18.3	43.59	5.828
62	711.3	1.1473	18.6	44.41	5.936
63	724.1	1.1493	18.8	45.20	6.042
64	737.1	1.1517	19.1	46.01	6.151
65	750.3	1.1543	19.4	46.84	6.261
66	763.3	1.1565	19.6	47.65	6.370
67	776.1	1.1584	19.8	48.45	6.477
68	789.1	1.1604	20.0	49.26	6.585

Density and concentration of **formic acid** (HCOOH) 20°/4 °C

% HCOOH	g per litre	Density (g/cm^3)	° Bé	lbs. per cubic foot	lbs. per gallon
69	802.3	1.1628	20.3	50.09	6.696
70	815.9	1.1655	20.6	50.93	6.808
71	829.1	1.1677	20.8	51.76	6.919
72	842.5	1.1702	21.1	52.60	7.031
73	856.1	1.1728	21.4	53.45	7.145
74	869.6	1.1752	21.6	54.29	7.257
75	882.7	1.1769	21.8	55.10	7.366
76	895.7	1.1785	22.0	55.91	7.474
77	908.7	1.1801	22.1	56.73	7.583
78	921.8	1.1818	22.3	57.55	7.693
79	935.1	1.1837	22.5	58.38	7.804
80	948.8	1.1860	22.7	59.23	7.918
81	962.0	1.1876	22.9	60.05	8.028
82	975.5	1.1896	23.1	60.90	8.141
83	988.9	1.1914	23.3	61.73	8.252
84	1002	1.1929	23.5	62.55	8.362
85	1016	1.1953	23.7	63.43	8.479
86	1030	1.1976	23.9	64.30	8.595
87	1043	1.1994	24.1	65.14	8.708
88	1057	1.2012	24.3	65.99	8.821
89	1070	1.2028	24.5	66.83	8.933
90	1084	1.2044	24.6	67.67	9.046
91	1097	1.2059	24.8	68.51	9.158
92	1111	1.2078	25.0	69.37	9.273
93	1125	1.2099	25.2	70.24	9.390
94	1139	1.2117	25.3	71.10	9.505
95	1153	1.2140	25.6	72.00	9.625
96	1167	1.2158	25.7	72.86	9.740
97	1180	1.2170	25.9	73.69	9.851
98	1194	1.2183	26.0	74.53	9.964
99	1208	1.2202	26.2	75.41	10.08
100	1221	1.2212	26.3	76.24	10.19

Density and concentration of **sulfuric acid** (H_2SO_4) 20°/4 °C

% H_2SO_4	g per litre	Density (g/cm^3)	° Bé	lbs. per cubic foot	lbs. per gallon
1	10.05	1.0051	0.7	0.6275	0.0839
2	20.24	1.0118	1.7	1.263	0.1689
3	30.55	1.0184	2.6	1.907	0.2550
4	41.00	1.0250	3.5	2.560	0.3422
5	51.59	1.0317	4.5	3.220	0.4305
6	62.31	1.0385	5.4	3.890	0.5200
7	73.17	1.0453	6.3	4.568	0.6106
8	84.18	1.0522	7.2	5.255	0.7025
9	95.32	1.0591	8.1	5.950	0.7955
10	106.6	1.0661	9.0	6.655	0.8897
11	118.0	1.0731	9.9	7.369	0.9851
12	129.6	1.0802	10.8	8.092	1.082
13	141.4	1.0874	11.7	8.825	1.180
14	153.3	1.0947	12.5	9.567	1.279
15	165.3	1.1020	13.4	10.32	1.379
16	177.5	1.1094	14.3	11.08	1.481
17	189.9	1.1168	15.2	11.85	1.584
18	202.4	1.1243	16.0	12.63	1.689
19	215.0	1.1318	16.9	13.42	1.795
20	227.9	1.1394	17.7	14.23	1.902
21	240.9	1.1471	18.6	15.04	2.010
22	254.1	1.1548	19.4	15.86	2.120
23	267.4	1.1626	20.3	16.69	2.231
24	280.9	1.1704	21.1	17.54	2.344
25	294.6	1.1783	21.9	18.39	2.458
26	308.4	1.1862	22.8	19.25	2.574
27	322.4	1.1942	23.6	20.13	2.691
28	336.6	1.2023	24.4	21.02	2.809
29	351.0	1.2104	25.2	21.91	2.929
30	365.6	1.2185	26.0	22.82	3.051
31	380.3	1.2267	26.8	23.74	3.173
32	395.2	1.2349	27.6	24.67	3.298
33	410.3	1.2432	28.4	25.61	3.424
34	425.5	1.2515	29.1	26.56	3.551

Density and concentration of **sulfuric acid** (H_2SO_4) 20°/4 °C

% H_2SO_4	g per litre	Density (g/cm^3)	° Bé	lbs. per cubic foot	lbs. per gallon
35	441.0	1.2599	29.9	27.53	3.680
36	456.6	1.2684	30.7	28.51	3.811
37	472.5	1.2769	31.4	29.49	3.943
38	488.5	1.2855	32.2	30.49	4.077
39	504.7	1.2941	33.0	31.51	4.212
40	521.1	1.3028	33.7	32.53	4.349
41	537.8	1.3116	34.5	33.57	4.488
42	554.6	1.3205	35.2	34.62	4.628
43	571.6	1.3294	35.9	35.69	4.770
44	588.9	1.3384	36.7	36.76	4.914
45	606.4	1.3476	37.4	37.86	5.061
46	624.2	1.3569	38.1	38.97	5.209
47	642.2	1.3663	38.9	40.00	5.359
48	660.4	1.3758	39.6	41.23	5.511
49	678.8	1.3854	40.3	42.38	5.665
50	697.6	1.3951	41.1	43.55	5.821
51	716.5	1.4049	41.8	44.73	5.979
52	735.7	1.4148	42.5	45.93	6.140
53	755.1	1.4248	43.2	47.14	6.302
54	774.9	1.4350	44.0	48.37	6.467
55	794.9	1.4453	44.7	49.62	6.634
56	815.2	1.4557	45.4	50.89	6.803
57	835.7	1.4662	46.1	52.17	6.974
58	856.5	1.4768	46.8	53.47	7.148
59	877.6	1.4875	47.5	54.79	7.324
60	899.0	1.4983	48.2	56.12	7.502
61	920.6	1.5091	48.9	57.47	7.682
62	942.4	1.5200	49.6	58.83	7.865
63	964.5	1.5310	50.3	60.21	8.049
64	986.9	1.5421	51.0	61.61	8.236
65	1010	1.5533	51.7	63.03	8.426
66	1033	1.5646	52.3	64.46	8.618
67	1056	1.5760	53.0	65.92	8.812
68	1079	1.5874	53.7	67.39	9.008

Density and concentration of **sulfuric acid** (H_2SO_4) 20°/4 °C

% H_2SO_4	g per litre	Density (g/cm^3)	° Bé	lbs. per cubic foot	lbs. per gallon
69	1103	1.5989	54.3	68.87	9.207
70	1127	1.6105	55.0	70.38	9.408
71	1152	1.6221	55.6	71.90	9.611
72	1176	1.6338	56.3	73.44	9.817
73	1201	1.6456	56.9	74.99	10.02
74	1226	1.6574	57.5	76.57	10.24
75	1252	1.6692	58.1	78.15	10.45
76	1278	1.6810	58.7	79.75	10.66
77	1303	1.6927	59.3	81.37	10.88
78	1329	1.7043	59.9	82.99	11.09
79	1355	1.7158	60.5	84.62	11.31
80	1382	1.7272	61.1	86.26	11.53
81	1408	1.7383	61.6	87.90	11.75
82	1434	1.7491	62.1	89.54	11.97
83	1460	1.7594	62.6	91.16	12.19
84	1486	1.7693	63.0	92.78	12.40
85	1512	1.7786	63.5	94.38	12.62
86	1537	1.7872	63.9	95.95	12.83
87	1562	1.7951	64.2	97.49	13.03
88	1586	1.8022	64.5	99.01	13.23
89	1610	1.8087	64.8	100.5	13.43
90	1633	1.8144	65.1	101.9	13.63
91	1656	1.8195	65.3	103.4	13.82
92	1678	1.8240	65.5	104.8	14.00
93	1700	1.8279	65.7	106.1	14.19
94	1721	1.8312	65.8	107.5	14.36
95	1742	1.8337	65.9	108.7	14.54
96	1762	1.8355	66.0	110.0	14.70
97	1781	1.8364	66.0	111.2	14.87
98	1799	1.8361	66.0	112.3	15.02
99	1816	1.8342	65.9	113.4	15.15
100	1831	1.8305	65.8	114.3	15.28

Density and concentration of **acetic acid** (CH_3COOH) 20°/4 °C

% CH_3COOH	g per litre	Density (g/cm^3)	° Bé	lbs. per cubic foot	lbs. per gallon
1	9.996	0.9996	–	0.6240	0.0834
2	20.02	1.0012	0.2	1.250	0.1671
3	30.08	1.0025	0.4	1.877	0.2510
4	40.16	1.0040	0.6	2.507	0.3351
5	50.28	1.0055	0.8	3.139	0.4196
6	60.41	1.0069	1.0	3.771	0.5042
7	70.58	1.0083	1.2	4.406	0.5890
8	80.78	1.0097	1.4	5.043	0.6741
9	91.00	1.0111	1.6	5.681	0.7504
10	101.3	1.0125	1.8	6.321	0.8450
11	111.5	1.0139	2.0	6.962	0.9307
12	121.8	1.0154	2.2	7.607	1.017
13	132.2	1.0168	2.4	8.252	1.103
14	142.5	1.0182	2.6	8.899	1.190
15	152.9	1.0195	2.8	9.547	1.276
16	163.3	1.0209	3.0	10.20	1.363
17	173.8	1.0223	3.2	10.85	1.450
18	184.2	1.0236	3.3	11.50	1.538
19	194.8	1.0250	3.5	12.16	1.625
20	205.3	1.0263	3.7	12.81	1.713
21	215.8	1.0276	3.9	13.47	1.801
22	226.3	1.0288	4.1	14.13	1.889
23	236.9	1.0301	4.2	14.79	1.977
24	247.5	1.0313	4.4	15.45	2.066
25	258.2	1.0326	4.6	16.12	2.154
26	268.8	1.0338	4.7	16.78	2.243
27	279.4	1.0349	4.9	17.44	2.332
28	290.1	1.0361	5.1	18.11	2.421
29	300.8	1.0372	5.2	18.78	2.510
30	311.5	1.0384	5.4	19.45	2.600
31	322.2	1.0395	5.5	20.12	2.689
32	333.0	1.0406	5.7	20.79	2.779
33	343.8	1.0417	5.8	21.46	2.869
34	354.6	1.0428	6.0	22.13	2.959

Density and concentration of **acetic acid** (CH_3COOH) 20°/4 °C

% CH_3COOH	g per litre	Density (g/cm^3)	° Bé	lbs. per cubic foot	lbs. per gallon
35	365.3	1.0438	6.1	22.81	3.049
36	376.2	1.0449	6.2	23.48	3.139
37	387.0	1.0459	6.4	24.16	3.229
38	397.8	1.0469	6.5	24.83	3.320
39	408.7	1.0479	6.6	25.51	3.411
40	419.5	1.0488	6.8	26.19	3.501
41	430.4	1.0498	6.9	26.87	3.592
42	441.3	1.0507	7.0	27.55	3.683
43	452.2	1.0516	7.1	28.23	3.774
44	463.1	1.0525	7.2	28.91	3.865
45	474.0	1.0534	7.4	29.59	3.956
46	484.9	1.0542	7.5	30.27	4.047
47	495.9	1.0551	7.6	30.96	4.138
48	506.8	1.0559	7.7	31.64	4.230
49	517.8	1.0567	7.8	32.32	4.321
50	528.8	1.0575	7.9	33.01	4.413
51	539.7	1.0582	8.0	33.69	4.504
52	550.7	1.0590	8.1	34.38	4.596
53	561.6	1.0597	8.2	35.06	4.687
54	572.6	1.0604	8.3	35.75	4.779
55	583.6	1.0611	8.4	36.48	4.870
56	594.6	1.0618	8.4	37.12	4.962
57	605.6	1.0624	8.5	38.49	5.054
58	616.6	1.0631	8.6	39.18	5.146
59	627.6	1.0637	8.7	39.86	5.237
60	638.5	1.0642	8.8	40.55	5.329
61	649.5	1.0648	8.8	41.23	5.420
62	660.5	1.0653	8.9	41.92	5.512
63	671.5	1.0658	9.0	42.60	5.603
64	682.4	1.0662	9.0	43.28	5.695
65	693.3	1.0666	9.1	43.97	5.786
66	704.3	1.0671	9.1	44.65	5.877
67	715.2	1.0675	9.2	45.33	5.969
68	726.1	1.0678	9.2	46.01	6.059

Density and concentration of **acetic acid** (CH_3COOH) 20°/4 °C

% CH_3COOH	g per litre	Density (g/cm^3)	° Bé	lbs. per cubic foot	lbs. per gallon
69	737.1	1.0682	9.3	46.01	6.151
70	748.0	1.0685	9.3	46.69	6.242
71	758.8	1.0687	9.3	47.37	6.332
72	769.7	1.0690	9.4	48.05	6.423
73	780.6	1.0693	9.4	48.73	6.514
74	791.4	1.0694	9.4	49.40	6.604
75	802.2	1.0696	9.4	50.08	6.695
76	813.0	1.0698	9.5	50.76	6.785
77	823.8	1.0699	9.5	51.43	6.875
78	834.6	1.0700	9.5	52.10	6.965
79	845.3	1.0700	9.5	52.77	7.054
80	856.0	1.0700	9.5	53.44	7.143
81	866.6	1.0699	9.5	54.10	7.232
82	877.2	1.0698	9.5	54.76	7.321
83	887.8	1.0696	9.4	55.42	7.409
84	898.2	1.0693	9.4	56.07	7.496
85	908.6	1.0689	9.4	56.72	7.582
86	918.9	1.0685	9.3	57.36	7.668
87	929.2	1.0680	9.2	58.00	7.754
88	939.4	1.0675	9.2	58.64	7.839
89	949.5	1.0668	9.1	59.27	7.923
90	950.5	1.0661	9.0	60.51	8.007
92	979.2	1.0643	8.8	61.13	8.171
94	998.2	1.0619	8.5	62.31	8.330
96	1016	1.0588	8.1	63.45	8.482
98	1034	1.0549	7.6	64.54	8.627
100	1050	1.0498	6.9	65.04	8.761

Note: If the volume weight of an acetic acid lies at d = 1.0553 and higher (equivalent to 7.7 and more degrees Baumé) this density corresponds to two different concentrations (e. g., d = 1.0660 or 9.0 °Bé = 64 % or 90 %). In order to determine as to which value is correct, add some water to the acid: if the volume weight rises, the higher value is correct, and if it decreases, the lower value is correct.

Density and concentration of **hydrochloric acid** (HCl)

° Bé	% HCl	Density (g/cm^3)	° Bé	% HCl	Density (g/cm^3)
1.00	1.40	1.0069	13.00	19.63	1.0985
2.00	2.82	1.0140	13.25	20.04	1.1006
3.00	4.25	1.0211	13.50	20.45	1.1027
4.00	5.69	1.0284	13.75	20.86	1.1048
5.00	7.15	1.0357	14.00	21.27	1.1069
5.25	7.52	1.0394	14.25	21.68	1.1090
5.50	7.89	1.0413	14.50	22.00	1.1111
5.75	8.26	1.0432	14.75	22.50	1.1132
6.00	8.64	1.0450	15.00	22.92	1.1154
6.25	9.02	1.0469	15.25	23.33	1.1176
6.50	9.40	1.0488	15.50	23.75	1.1197
6.75	9.78	1.0507	15.75	24.16	1.1219
7.00	10.17	1.0526	16.0	24.57	1.1240
7.25	10.55	1.0545	16.1	24.73	1.1248
7.50	10.94	1.0564	16.2	24.90	1.1256
7.75	11.32	1.0584	16.3	25.06	1.1265
8.00	11.71	1.0603	16.4	25.23	1.1274
8.25	12.09	1.0623	16.5	25.39	1.1283
8.50	12.48	1.0642	16.6	25.56	1.1292
8.75	12.87	1.0662	16.7	25.72	1.1301
9.00	13.26	1.0681	16.8	25.89	1.1310
9.25	13.65	1.0701	16.9	26.05	1.1319
9.50	14.04	1.0721	17.0	26.22	1.1328
9.75	14.43	1.0741	17.1	26.39	1.1336
10.00	14.83	1.0761	17.2	26.56	1.1345
10.25	15.22	1.0781	17.3	26.73	1.1354
10.50	15.62	1.0801	17.4	26.90	1.1363
10.75	16.01	1.0821	17.5	27.07	1.1372
11.00	16.41	1.0841	17.6	27.24	1.1381
11.25	16.81	1.0861	17.7	27.41	1.1390
11.50	17.21	1.0881	17.8	27.58	1.1399
11.75	17.61	1.0902	17.9	27.75	1.1408
12.00	18.01	1.0922	18.0	27.92	1.1417
12.25	18.41	1.0932	18.1	28.09	1.1426
12.50	18.82	1.0943	18.2	28.26	1.1435
12.75	19.22	1.0964	18.3	28.44	1.1444

Density and concentration of **hydrochloric acid** (HCl)

° Bé	% HCl	Density (g/cm^3)
18.4	28.61	1.1453
18.5	28.78	1.1462
18.6	28.95	1.1471
18.7	29.13	1.1480
18.8	29.30	1.1489
18.9	29.48	1.1498
19.0	29.65	1.1508
19.1	29.83	1.1517
19.2	30.00	1.1526
19.3	30.18	1.1535
19.4	30.35	1.1544
19.5	30.53	1.1554
19.6	30.71	1.1563
19.7	30.90	1.1572
19.8	31.08	1.1581
19.9	31.27	1.1590
20.0	31.45	1.1600
20.1	31.64	1.1609
20.2	31.82	1.1619
20.3	32.01	1.1628
20.4	32.19	1.1637
20.5	32.38	1.1647
20.6	32.56	1.1656
20.7	32.75	1.1666
20.8	33.03	1.1675
20.9	33.12	1.1684
21.0	33.31	1.1694
21.1	33.50	1.1703
21.2	33.69	1.1713
21.3	33.88	1.1722
21.4	34.07	1.1732
21.5	34.26	1.1741
21.6	34.45	1.1751
21.7	34.64	1.1760
21.8	34.83	1.1770
21.9	35.02	1.1779
22.0	35.21	1.1789
22.1	35.40	1.1798
22.2	35.59	1.1808
22.3	35.78	1.1817
22.4	35.97	1.1827
22.5	36.16	1.1836
22.6	36.35	1.1846
22.7	36.54	1.1856
22.8	36.73	1.1866
22.9	36.93	1.1875
23.0	37.14	1.1885
23.1	37.36	1.1895
23.2	37.58	1.1904
23.3	37.80	1.1914
23.4	38.03	1.1924
23.5	38.26	1.1934
23.6	38.49	1.1944
23.7	38.72	1.1953
23.8	38.95	1.1963
23.9	39.18	1.1973
24.0	39.41	1.1983
24.1	39.64	1.1993
24.2	39.86	1.2003
24.3	40.09	1.2013
24.4	40.32	1.2023
24.5	40.55	1.2033
24.6	40.78	1.2043
24.7	41.01	1.2053
24.8	41.24	1.2063
24.9	41.48	1.2073
25.0	41.72	1.2083
25.1	41.99	1.2093
25.2	42.30	1.2103
25.3	42.64	1.2114
25.4	43.01	1.2124
25.5	43.40	1.2134

Density and concentration of **oxalic acid** [$(COOH)_2 \cdot 2H_2O$] at 15 °C

% Oxalic acid $\cdot$ 2 H_2O	Density g/cm^3	g per litre
1	1.0032	10.03
2	1.0064	20.13
3	1.0096	30.29
4	1.0128	40.51
5	1.0160	50.80
6	1.0182	61.09
7	1.0204	71.43
8	1.0226	81.81
9	1.0248	92.23
10	1.0271	102.71
11	1.0289	113.18
12	1.0309	123.71
12.6	1.0320	130.03

Salts

Density and concentration of **ammonium chloride** (NH_4Cl) at 20 °C

% ammonium chloride	Density g/cm^3	g per litre
1	1.0013	10.01
2	1.0045	20.09
4	1.0107	40.43
6	1.0168	61.01
8	1.0227	81.82
10	1.0286	102.86
12	1.0344	124.13
14	1.0401	145.61
16	1.0457	167.31
18	1.0512	189.22
20	1.0567	211.34
22	1.0621	233.66
26	1.0726	278.88

Density and concentration of **ammonium sulfate** [$(NH_4)_2\ SO_4$] at 20 °C

% ammonium-sulfate	Density g/cm^3	g per litre
1	1.0041	10.04
2	1.0101	20.20
4	1.0220	40.88
6	1.0338	62.03
8	1.0456	83.65
10	1.0574	105.74
12	1.0691	128.29
14	1.0808	151.31
16	1.0924	174.78
18	1.1039	198.70
20	1.1154	223.08
24	1.1383	273.19
28	1.1609	325.05
30	1.1721	351.63
35	1.2000	420.00
40	1.2277	491.08
50	1.2825	641.25

Density and concentration of **sodium acetate** (CH_3COONa) at 17.5 °C

% CH_3COONa	% $CH_3COONa \cdot 3H_2O$	Density (g/cm^3)
3.015	5	1.015
6.030	10	1.031
9.045	15	1.047
12.060	20	1.063
15.075	25	1.0795
18.090	30	1.0960
21.105	35	1.1130
24.120	40	1.1305
27.135	45	1.1485
30.150	50	1.1670

Density and concentration of **sodium chloride** ($NaCl$) at 20 °C

% NaCl	g per litre	Density (g/cm^3)	° Bé	lbs. per cubic foot	lbs. per gallon
1	10.05	1.0053	0.8	0.6276	0.0839
2	20.25	1.0125	1.8	1.264	0.1690
4	41.07	1.0268	3.8	2.564	0.3428
6	62.48	1.0413	5.8	3.900	0.5214
8	84.47	1.0559	7.7	5.273	0.7049
10	107.1	1.0707	9.6	6.684	0.8935
12	130.3	1.0857	11.5	8.133	1.087
14	154.1	1.1009	13.3	9.622	1.286
16	178.6	1.1162	15.1	11.15	1.490
18	203.7	1.1319	16.9	12.72	1.700
20	229.6	1.1478	18.7	14.33	1.916
22	256.1	1.1640	20.4	15.99	2.137
24	283.3	1.1804	22.2	17.69	2.364
26	311.3	1.1972	23.9	19.43	2.598

Density and concentration of **sodium sulfate** (Na_2SO_4) 20°/4 °C

% Na_2SO_4	g per litre	Density (g/cm^3)	° Bé	lbs. per cubic foot	lbs. per gallon
1	10.07	1.0073	1.1	0.6288	0.0841
2	20.33	1.0164	2.3	1.269	0.1696
4	41.39	1.0348	4.9	2.584	0.3454
6	63.21	1.0535	7.4	3.946	0.5275
8	85.79	1.0724	9.8	5.356	0.7160
10	109.2	1.0915	12.2	6.814	0.9109
12	133.3	1.1109	14.5	8.322	1.112
14	158.3	1.1306	16.8	9.881	1.321
16	184.1	1.1506	19.0	11.49	1.536
18	210.8	1.1709	21.2	13.16	1.759
20	238.3	1.1915	23.3	14.88	1.989
22	266.7	1.2124	25.4	16.65	2.226
24	296.1	1.2336	27.5	18.48	2.471

Density and concentration of **sodium sulfate cryst.**
($Na_2SO_4 \cdot 10H_2O$) 20°/4 °C

% $Na_2SO_4 \cdot 10H_2O$	g per litre	Density (g/cm^3)	° Bé	lbs. per cubic foot	lbs. per gallon
2.268	22.85	1.0073	1.1	1.426	0.1907
4.536	46.11	1.0164	2.3	2.878	0.3848
9.073	93.88	1.0348	4.9	5.861	0.7835
13.61	143.4	1.0535	7.4	8.950	1.197
18.15	194.6	1.0724	9.8	12.15	1.624
22.68	247.6	1.0915	12.2	15.46	2.066
27.22	302.4	1.1109	14.5	18.88	2.523
31.75	359.0	1.1306	16.8	22.41	2.996
36.29	417.6	1.1506	19.0	26.07	3.485
40.83	478.1	1.1709	21.2	29.84	3.989
45.36	540.5	1.1915	23.3	33.74	4.511
49.90	605.0	1.2124	25.4	37.77	5.049
54.44	671.5	1.2336	27.5	41.92	5.604

Density and concentration of **sodium sulfite** (Na_2SO_3) at 15 °C

Density (g/cm^3)	°Bé	% Na_2SO_3	% SO_2
1.008	1	0.6	0.4
1.015	2	1.3	0.9
1.022	3	2.1	1.3
1.030	4	2.8	1.7
1.038	5	3.6	2.2
1.045	6	4.3	2.6
1.052	7	5.1	3.1
1.060	8	5.8	3.5
1.068	9	6.5	3.9
1.076	10	7.2	4.3
1.084	11	8.0	4.8
1.092	12	8.8	5.2
1.100	13	9.5	5.7
1.108	14	10.3	6.2
1.116	15	11.2	6.8
1.125	16	12.0	7.3
1.134	17	12.8	7.8
1.143	18	13.7	8.4
1.152	19	14.6	9.0
1.161	20	15.5	9.6
1.171	21	16.5	10.2
1.181	22	17.5	10.8
1.190	23	18.5	11.5
1.200	24	19.7	12.2
1.210	25	20.9	12.9
1.220	26	22.2	13.7
1.230	27	23.5	14.5
1.241	28	24.7	15.2
1.252	29	25.9	15.9
1.263	30	27.4	16.8
1.275	31	28.9	17.8
1.286	32	30.3	18.7
1.298	33	31.7	19.6
1.309	34	33.2	21.0
1.321	35	34.7	22.5
1.333	36	36.4	23.0
1.345	37	38.0	23.6

Density and concentration of **sodium bisulfite** ($NaHSO_3$) at 15 °C

% $NaHSO_3$	g per litre	Density (g/cm^3)	° Bé	lbs. per cubic foot	lbs. per gallon
1.02	10.27	1.0069	1	0.6411	0.0857
2.04	20.69	1.0140	2	1.291	0.1726
3.06	31.25	1.0211	3	1.951	0.2607
4.08	41.96	1.0284	4	2.619	0.3502
5.11	52.92	1.0357	5	3.304	0.4417
6.15	64.16	1.0432	6	4.005	0.5354
7.19	75.55	1.0507	7	4.716	0.6304
8.24	87.21	1.0584	8	5.444	0.7278
9.30	99.16	1.0662	9	6.190	0.8275
10.36	111.3	1.0741	10	6.947	0.9286
11.42	123.6	1.0821	11	7.714	1.031
12.48	136.1	1.0902	12	8.493	1.135
13.56	149.0	1.0985	13	9.299	1.243
14.65	162.2	1.1069	14	10.12	1.353
15.75	175.7	1.1154	15	10.97	1.466
16.85	189.4	1.1240	16	11.82	1.581
17.96	203.5	1.1328	17	12.70	1.698
19.08	217.8	1.1417	18	13.60	1.818
20.20	232.5	1.1508	19	14.51	1.940
21.32	247.3	1.1600	20	15.44	2.064
22.44	262.4	1.1694	21	16.38	2.190
23.57	277.9	1.1789	22	17.35	2.319
24.71	293.7	1.1885	23	18.22	2.451
25.85	309.8	1.1983	24	19.34	2.585
26.99	326.1	1.2083	25	20.36	2.722
28.13	342.8	1.2185	26	21.40	2.860
29.27	359.7	1.2288	27	22.45	3.001
30.43	377.1	1.2393	28	23.54	3.147
31.57	394.6	1.2500	29	24.63	3.293
32.71	412.4	1.2609	30	25.75	3.442
33.86	430.7	1.2719	31	26.88	3.594
35.01	449.2	1.2832	32	28.04	3.749
36.25	469.3	1.2946	33	29.30	3.916
37.51	490.0	1.3063	34	30.59	4.089

Density and concentration of **sodium thiosulfate**
($Na_2S_2O_3 \cdot 5H_2O$) at 20 °C

Density (g/cm^3)	% $Na_2S_2O_3 \cdot 5H_2O$	g per litre
1.0065	1.57	15.8
1.0148	3.14	31.8
1.0315	6.28	64.7
1.0483	9.42	98.7
1.0654	12.56	133.8
1.0827	15.70	170.0
1.1003	18.84	207.3
1.1182	21.98	245.7
1.1365	25.12	285.4
1.1551	28.25	326.4
1.1740	31.39	368.6
1.1932	34.53	412.1
1.2128	37.67	456.9
1.2328	40.81	503.1
1.2532	43.95	550.8
1.2739	47.09	599.9
1.3273	54.94	729.2
1.3827	62.79	868.2

Technical literature

A. Books*

1. Bibliothek des Leders
   Herausgeber: Prof. Dr. Ing. habil. Hans Herfeld
   1. Auflage 1981–1990
   Umschau Verlag – Frankfurt am Main

- Band 1: H. Herfeld
  Die tierische Haut (1990)
- Band 2: A. Zissel
  Arbeiten der Wasserwerkstatt bei der Lederherstellung (1987)
- Band 3: K. Faber
  Gerbmittel, Gerbung und Nachgerbung (1984)
- Band 4: M. Hollstein
  Entfetten, Fetten und Hydrophobieren bei der Lederherstellung (1988)
- Band 5: K. Eitel
  Das Färben von Leder (1987)
- Band 6: R. Schubert
  Lederzurichtung – Oberflächenbehandlung des Leders (1982)
- Band 7: H. Herfeld
  Rationalisierung der Lederherstellung durch Mechanisierung und Automatisierung – Gerbereimaschinen (1990)
- Band 8: L. Feikes
  Ökologische Probleme der Lederindustrie (1985)
- Band 9: H. Pfisterer
  Energieeinsatz in der Lederindustrie (1985)
- Band 10: J. Lange
  Qualitätsbeurteilung von Leder, Lederfehler, Lederlagerung und Lederpflege (1982)

2. Gerbereichemie und Gerbereitechnologie
   Dr. phil. habil. Fritz Stather
   4. Auflage 1967
   Akademie Verlag – Berlin

3. The Chemistry and Technology of Leather
Fred O'Flaherty, William T. Roddy, Robert M. Lollar
1st edition 1956 – 1965
Volume 1 Preparation for Tannage (1956)
Volume 2 Types of Tannage (1958)
Volume 3 Process Control of Leather Quality (1961)
Volume 4 Evaluation of Leather (1965)
Reinhold Publishing Corporation – New York/USA

4. Leather Technician's Handbook
J. H. Sharphouse
2nd edition 1972/reprint 1975
Leather Producers' Association – London/UK

5. Lederherstellung
Dr. K. Pauligk/Gerberei-Obering. R. Hagen
2. Auflage 1983
Fachbuchverlag – Leipzig

6. Ledertechnik
Dr. W. Werner
1. Auflage 1979
Fachbuchverlag – Leipzig

7. Das Färben des Leders
Dr. Gerhard Otto
1. Auflage 1962
Eduard Roether KG – D-64212 Darmstadt

8. La Nourriture du Cuir
Dr. Jean Poré
1st edition 1974
Société des Publications "Le Cuir" – Paris/F

9. Gerbereichemisches Taschenbuch
Dr. A. Küntzel
6. Auflage 1955
Verlag Theodor Steinkopff – Dresden/Leipzig

10. Official Methods of Analysis
4th edition 1965 (with supplements)
Society of Leather Technologists and Chemists; Redbourn, Herts./UK

11. Practical Leather Technology
T. C. Thorstensen
2nd edition 1976
Reinhold Publishing Corporation – New York/USA

12. Physical Chemistry of Leather Making
K. Bienkiewicz, R. E. Krieger
1st edition 1983
Publishing Company – Malabar Florida/USA

13. Rauchwarenherstellung und Pelzkonfektion
Autorenkollektiv
1. Auflage 1979
Fachbuchverlag – Leipzig

14. Lederwörterbuch in sechs Sprachen
Dr. G. Otto/Antoni Yila-Catalá
1. Auflage 1976
Eduard Roether KG – D-64212 Darmstadt

15. Leather Guide
International Directory of the Industry (published annually)
Benn Publications Ltd. – Tunbridge Wells, Kent/UK

16. Fundamentals of Leather Manufacturing
Prof. Dr. E. Heidemann
1st edition 1993
Eduard Roether KG – D-64212 Darmstadt

17. Possible defects in leather production
Gerberei-Ing. Gerhard John
1. Auflage 1997
Selbstverlag – D-68623 Lampertheim

18. Praktische Farbmessung
Berger-Schunn
2. Auflage 1994
Muster-Schmidt Verlag, Göttingen, Zürich

19. Principles of Color Technology
F. W. Billmeyer Jr., M. Saltzmann
2. Auflage 1981
Wiley, New York

* Some titles are currently not available

B. Selection of Journals (devoted mainly to pure science)

1. Journal of the Society of Leather Technologists and Chemists
   (published bimonthly)
   Society of Leather Trades' Chemists
   49 North Park Street
   Dewsbury, West Yorkshire, GB

2. The Journal of the American Leather Chemists Association
   (published monthly)
   330 White Falls Drive
   Columbia, SC, USA

C. Selection of Journals (devoted mainly to practice)

1. Leder- und Häutemarkt (published every two weeks)
   Spezialfachzeitschrift für die Lederindustrie, den Häute- und Ledergroßhandel mit Beilage: Gerbereiwissenschaft und Praxis.
   Umschau-Verlag – Frankfurt am Main, Germany

2. Leather International (published monthly)
   Polygon Media Ltd.
   Tubs Hill House
   London Road/Seven Oaks,
   Kent, GB

3. IDC Industries du Cuir (published monthly)
   14, rue de la Folie-Regnault
   75011 Paris, France

4. World Leather (published monthly)
   Shoes Trades Publishing Company
   P.O. Box 6, 36, Crosby Road North
   Liverpool, GB

5. La Conceria S. R. L. (published weekly)
   Via Brisa 3,
   20123 Milano, Italy

International commercial terms

a.a.r.	against all risks
a.r.	all risks
A.C.	American conditions
A/T	American terms
acct.	account
Av.	average
B.L.	bill of lading
C.A.D.	cash against documents
C.B.D.	cash before delivery
c. & f.	cost and freight
c. & i.	cost and insurance
C/I	certificate of insurance
C.I.A.	cash in advance
c.i.f.	cost, insurance and freight
c.i.f. & c.	cost, insurance, freight and commission
c.i.f.c. & i.	cost, insurance, freight, commission and interest
c.o.d (COD)	cash on delivery
c.o.s.	cash on shipment
c.p.t.	cost paid for transportation
C.W.O.	cash with order
D.A.	deposit account

D.A.D.	document account disposition
D.A.F.	delivery at frontier
D.D.V.	delivery at destination undeclared
D.E.Q.	delivery at quayside
D.E.S.	delivery ex ship
d.f.	dead freight
D/N	debit note
D.O. (d/o)	delivery order
D/P	documents against payment
D.W	dock warrent
E.c.	English conditions
E. & O.E.	errors and omissions excluded
E.O.M.	end of month
E.X.N.	delivery ex works
f.a.a.	free of all average
F.A.S.	free alongside ship
f.o.t.	free on truck
f.p.a.	free of particular average
frt.pp.	freight prepaid
g.a.	general average
I.B.	in bond
Int.	interset

i.P.A.	including part average
I.T.	immediate transportation
L/C	letter of credit
L. & D.	loss and damage
M.D.	months' date
M.I.P.	maritime insurance policy
M/P	months after payment
N/T	new terms
n.wt.	net weight
O.P.	open policy
O.R.	owner's risk
O.R.D.	owner's risk damage
O/T	old terms
P/a	part average
P.L.	part loss
P/N	promissory note
P.O.D.	pay on delivery
ppd.	prepaid
ppt.	prompt
r.c.c. & s.	riots, civil commotions and strikes
rect(rept)	receipt
R.I.	reinsurance

RP	reply paid
S. (sgd)	signed
S.D.B.L.	sight draft and bill lof lading
S. & F.A.	ship broker ad forwarding agent
s.g. (sp.gr.)	specific gravity
S/N	shipping note
S/S	steamship
T/A	trade acceptance
t.l.o.	total loss only
t.q.	tel quel
tr.	tara
u.c.	usual conditions
u.t.	usual terms
U/w	underwriter
W.B.	waybill
w.g.	weight guaranteed
w/m	weight or measure
W.R.	war risk
W/R	warehouse receipt
wt	weight
W/W	warehouse warrant

Standard time in World time zones

The table below shows the standard local time at various places in the different world time zones when it is 12.00 (CET) noon in Berlin (Germany).
(*Time kept one hour in advance of the actual time during summer.)

Place	Time
Accra (Ghana)	11.00
Algiers (Algeria)	12.00
Alma-Ata (Kazakhstan)	16.00
Amsterdam (Netherlands)	12.00
Angmagssalik (Greenland)	8.00
Antwerp (Belgium)	12.00
Athens (Greece)	13.00
Baghdad (Iraq)	14.00
Bangkok (Thailand)	18.00
Belgrade (Yugoslavia)	12.00
Bern (Switzerland)	12.00
Bogota (Colombia)	6.00
Bombay (India)	16.30
Bratislawa (Slovakia)	12.00
Brussels (Belgium)	12.00
Budapest (Hungary)	12.00
Buenos Aires (Argentine)	8.00
Bukarest (Romania)	13.00
Cairo (Egypt)	*13.00
Caracas (Venezuela)	6.30
Casablanca (Morocco)	11.00
Chicago (USA)	* 5.00
Chunking (China)	19.00
Colombo (Ceylon)	16.30
Copenhagen (Denmark)	12.00
Dakar (West Africa)	11.00
Dublin (Ireland)	11.00
Glasgow (Scotland)	*11.00
Guatemala (Central America)	5.00

Place	Time
Helsinki (Finland)	13.00
Hongkong	19.00
Honolulu (Hawaii)	1.00
Istanbul (Turkey)	13.00
Jakarta (Indonesia)	18.00
Jerusalem (Israel)	13.00
Johannesburg (South Africa)	13.00
Kabul (Afghanistan)	15.30
Karachi (Pakistan)	16.00
Kiev (Ukraine)	13.00
Kingsbay (Spitzbergen)	12.00
Kuala Lumpur (Malaysia)	19.00
Las Palmas (Canary Islands)	11.00
Lisbon (Portugal)	12.00
London (Great Britain)	11.00
Los Angeles (USA)	* 3.00
Ljubljana (Slovenia)	12.00
Madrid (Spain)	12.00
Manila (Philippines)	19.00
Masqat (Saudi Arabia)	15.00
Melbourne (Australia)	21.00
Mexico City (Mexico)	5.00
Milan (Italy)	12.00
Minsk (White Russia)	14.00
Montreal (Canada)	* 6.00
Moscow (Russia)	*13.00
New York (USA)	* 6.00
Nome (Alaska)	* 0.00

Place	Time
Oslo (Norway)	*12.00
Panama	6.00
Paris (France)	12.00
Peking (China)	19.00
Prague (Czech Rep.)	12.00
Rangoon (Burma)	17.30
Reykjavik (Iceland)	*10.00
Riga (Latvia)	13.00
Rio de Janeiro (Brazil)	8.00
Rome (Italy)	12.00
San Francisco (USA)	* 3.00
Santiago de Chile	8.00
Seoul (Korea)	20.00
Singapore	19.00
Sofia (Bulgaria)	13.00
Stockholm (Sweden)	12.00
St. Petersburg (Russia)	*14.00
Sidney (Australia)	21.00
Tashkent (Uzbekistan)	17.00
Tenerife (Canary Islands)	11.00
Tokio (Japan)	20.00
Vancouver (Canada)	* 3.00
Venice (Italy)	12.00
Vienna (Austria)	12.00
Warsaw (Poland)	*12.00
Zagreb (Croatia)	12.00

Adresses

BASF Aktiengesellschaft

Postal address: Carl-Bosch-Straße 38
67056 Ludwigshafen

Telephone: (06 21) 60-0 (switchboard)
Direct line: (06 21) 60-…

Telefax: (06 21) 60-4 25 25

Telex: 46499-0 bas d

E-Mail: info.serice@basf-ag.de

Website: www.basf-ag.de

Performance Chemicals for Leather		
BASF Aktiengesellschaft	Tel	(49) 621 60-99504
	Telefax	(49) 621 60 99381
Global Business Management	E-Mail	leather-info@basf-ag.de
Performance Chemicals	Website	www.basf.com/leather
for Leather		
BASF South East Asia Pte. Ltd.	Tel	(65) 432 34 38
Regional Business Unit	Telefax	(65) 432 34 10
Performance Chemicals for		
Leather Asia		
BASF Corporation	Tel	(1) 704 398 42 09
Regional Business Unit	Telefax	(1) 704 398 42 82
Performance Chemicals for		
Leather NAFTA		
BASF S.A.	Tel	(55) 11 4343 2968
Regional Business Unit	Telefax	(55) 11 4343 2216
Performance Chemicals for		
Leather South America		

BASF Curtex S.A.
Regional Business Unit
Performance Chemicals for
Leather Europe
Tel (34) 93 2 61 61 00
Telefax (34) 93 2 61 62 11

BASF Aktiengesellschaft
Regional Marketing
Eastern Europe, Africa,
Western Asia
Tel (49) 621 60-44547
Telefax (49) 621 60 44618

BASF Representatives

Algeria
BASF SPA
13, Rue Arezki Abri
Hydra
16035 Alger

Tel	21 603493 21 603581 21 603589
Telefax	21 693811
E-Mail	basf@djazair-connect.com

Argentine
BASF Argentina S.A.
Av. Corrientes 327
C1043 AAD Buenos Aires
Casilla de Correo
Central 4800
C1000 Buenos Aires

Tel	11 4317-9600
Telefax	11 4317-9700
E-Mail	rrpp@basf-arg.com.ar
Website	www.basf.com.ar

Australia
BASF Australia Ltd.
500 Princes Highway
Noble Park Vic. 3174
G.P.O. Box 4705
Melbourne Vic. 3001

Tel	3 92121500
Telefax	3 92121511

Austria
BASF Österreich Ges.m.b.H.
Hietzinger Hauptstraße 119
Postfach 1000
1131 Wien

BCN	8-760-66 (operator) 8-760-nnn (direct line)
Tel	1 87890-0 (operator) 1 87890-... (direct line)
Telefax	1 87890-110
Website	www.basf.at

Bahrain
Yusuf Bin Ahmed Kanoo
Commercial Division
P.O. Box 45
Manama

Tel	738200
Telefax	732828

Bangladesh
BASF Bangladesh Limited
H.R. Bhaban (4th floor)
26/1, Kakrail Road
P.O. Box 410
Dhaka-1000

Tel	2 8313479 2 9348374 2 9348375 2 9348376
Telefax	2 8313599
E-Mail	basfdhak@citechco.net
Website	www.basf-bangla.com

Belarus
BASF CIS Trading GmbH
Agency in Belarus
Pr. Masherova 5
220004 Minsk

Tel	172 239042 172 239024 172 893042 172 233114 172 239133 172 239826 172 893079
Telefax	172 239013

Belgium
BASF Belgium S.A./N.V.
Avenue Hamoir 14/
Hamoirlaan 14
1180 Bruxelles/Brussel

BCN	8-39-2111 (operator) 8-39-nnnn (direct line)
Tel	2 373-2111 (operator) 2 373-.... (direct line)
Telefax	2 3751042
Website	www.basf-belg.be

Bolivia
BASF Bolivia S.R.L.
Av. Monseñor Riveros esq.
Asunción
1° Piso- Edificio Citibank
Casilla 7185
Santa Cruz

Tel	3 3377262
Fax	3 3377263

Brazil
BASF S.A.
Estrada Samuel
Aizemberg 1707
09851-550 São Bernardo
do Campo – SP

BCN	8-52-2233 (operator) 8-52-nnnn (direct line)
Tel	11 4343-2233
Telefax	11 4343-6989

Bulgaria
BASF EOOD
WV Ivan Vasov Balscha Str. 1
1408 Sofia

Tel	2 9516178 (operator) 2 9516973 2 9519286
Telefax	2 9516579 2 9549638

Canada
BASF Canada
345 Carlingview Drive
Toronto, Ontario M9W 6N9

Tel	416 675-3611
Telefax	416 674-2588

Chile
BASF Chile S.A.
Av. Carrascal 3851
7360081 Santiago de Chile
Casilla 3238
6501020 Santiago de Chile

Tel	2 6407-000
Telefax	2 6407-107 (GL) 2 7753095 (Distribution) 2 7737542 (Import) 2 7736101 (Agro)
E-Mail	rrpp@basf-chile.cl

China (cf. Hongkong)
BASF (China) Co Ltd.
15/F, Beijing Sunflower Tower
No. 37, Maizidian Street
Chaoyang District
Beijing 100026

BCN	8-682-0 (operator) 8-682-nnnn (direct line)
Tel	10 65918899
Telefax	10 85275599

Colombia
BASF Química Colombiana S.A.
Calle 99A No. 51-32
A.A. 5751 y 7072
Bogotá

BCN	8-634-1nnn (direct line) 8-634-2nnn (direct line)
Tel	1 6322260
Telefax	1 6242646 (Management)

Costa Rica
BASF de Costa Rica, S.A.
100 m al este del
Taller Wabe
Granadilla Norte de
Curridabat
San José

Tel	2 538066
Telefax	2 342449
E-Mail	basfcr@racsa.co.cr

Croatia
BASF Croatia d.o.o.
Vlaska 40
10000 Zagreb

BCN	8-7735-243 (operator)
	8-7735-nnn (direct line)
Tel	1 4814243
	1 4814238
Telefax	1 4814246
	1 4814224

Cuba
BASF Dominicana S.A.
Sucursal de Cuba
Calle 3ra No. 3406 Apto. 3C
e/34 y 36, Miramar, Playa
La Habana
Apartado Postal 4009
Vedado, La Habana

Tel	7 246225
	7 246226
Telefax	7 246026
E-Mail	bdc@ip.etecsa.cu

Czech Republic
BASF spol. s r.o.
Safrankova 3
15500 Praha 5

BCN	8-763-111 (operator)
	8-763-nnn (direct line)
Tel	2 35000111
Telefax	2 35000222
E-Mail	info@basf.cz
Website	www.basf.cz

Denmark
BASF A/S
– Agro Nordic/Baltic
– Fine Chemicals
  Nordic/Baltic
Ved Stadsgraven 15
Postboks 1734
2300 Kopenhagen

BCN	8-740-700 (operator)
	8-740-nnn (direct line)
Tel	32660700
Telefax	32572202
E-Mail	basf-dk@nordic.basf.org
Website	www.basf.com/nordic

Dominican Republic
BASF Dominicana S.A.
Plaza RRJ,
3er nivel – Bella Vista
Av. Romulo Betancourt
No. 279
Santo Domingo
Tel 3341026
5320088
Telefax 3341027
E-Mail basf.dom@codetel.net.do

Ecuador
BASF Ecuatoriana S.A.
Av. República 500
Edificio Pucara, Piso 12
Casilla de Correo
17-01-3255
Quito
Tel 22 541-100
22 541-291
22 569368
(General manager)
Telefax 22 509-194
22 509-195

Egypt
BASF Limited
11, Abu el Feda Street
11211 Zamalek – Cairo
Tel (2) 7356210
Telefax (2) 7364710
E-Mail basf.egypt@africa.basf.org

El Salvador
BASF de El Salvador,
S.A. de C.V.
Calle L-2 No 21,
Ciudad Merliot
La Libertad
Tel 2895420
Telefax 2784299

Estonia
see under Lithuania

Finland
BASF Oy
– Paper Nordic/Baltic
Annankatu 42 C
PL 500
00101 Helsinki
Tel 9 61598-1
Telefax 9 61598-250
E-Mail basf-fi@nordic.basf.org
Website www.basf.com/nordic

France
BASF France S.A.
49, avenue Georges
Pompidou
92593 Levallois Perret
Cedex
BCN 8-31-5000 (operator)
8-31-nnnn (direct line)
Tel 1 4964-5000 (operator)
1 4964-.... (direct line)
Telefax 1 4964-5050
Telex basfc 620445f

Greece
Dr. D.A. Delis AG
Paleologou Benizelou 5
10556 Athínai
Tel 10 3297222
Telefax 10 3230550
10 3297300
Cable delichimik

Guatemala
BASF de Guatemala S.A.
Avenida Petapo 47 – 31,
Zona 12
Apartado Postal 850
Ciudad de Guatemala
Tel 4 774659 PBX
Telefax 4 774680

Haiti
Walter Hirsch AdM
Mr. Werner Hirsch
12, Rue du Quai
P.O. Box 248
Port-au-Prince
Tel 225903
222042
Telefax 225903
231886
E-Mail whirsch@acn.com

Honduras
P.A.Y.S.E.N., S.A. de C.V.
Edificio P.A.Y.S.E.N.,
S.A. de C.V.
Colonia Altos de Miraflores Sur
Atrás del plantel de
Hogares – SOVIPE
Apartado Postal 252
Tegucigalpa, D.C.
Tel 2 283156
2 283157
2 283155
2 283213
Telefax 2 283158
E-Mail paysen.basf@hn2.com

Hungary
BASF Hungária Kft.
Seregély u. 1-5.
1034 Budapest
BCN 8-761-700 (operator)
8-761-7nn (direct line)
Tel 1 2504111
1 2509700
Telefax 1 2504660
1 2504661

Iceland
see Denmark

India
BASF India Limited
Rhône-Poulenc House
Sudam Kalu Ahire Marg.
P. O. Box 19108
Mumbai-400 025

Tel 22 4930703
Telefax 22 4950512
22 4941612

Indonesia
P.T. BASF Indonesia
Main Office
Plaza GRI, 10th & 11th floor
Jl. H.R. Rasuna Said
Blok X-2/No. 1
Jakarta 12950
P.O. Box 2431 Gbr.
Jakarta 10024

Tel 21 5262481
21 5262505
Telefax 21 5262541
21 5262515

Iran
BASF Iran AG
Sohrevardi Shomali Ave.
Kangavar Alley-No 5
Teheran
P.O. Box 1365-4619
Teheran 15579

Tel 21 8768403
21 8768237
21 8764840
21 8769542
Telefax 21 8762894
E-Mail basf_m_iran@mftmail.com

Ireland
BASF Ireland Limited
Bracetown Business Park
Clonee
Co. Meath

Tel 1 8255701
Telefax 1 8252038
E-Mail basfirl@indigo.ie

Italy
BASF Italia Spa
Management, Sales and Factory
Via Marconato 8
20031 Cesano Maderno MI

BCN 8-722-111 (operator)
8-722-nnn (direct line)
Tel 0362 512-1 (operator)
0362 512-... (direct line)
Telefax 0362 512-210

Japan
BASF Japan Ltd.
Osaka Office
1-8-15, Azuchimachi,
Chuo-ku
Osaka 541-0052

BCN	8-501-nnn (direct line)
Tel	6 6266-nnnn (direct line)
	6 6266-6801 (BM Specialties)
Telefax	6 6266-6956 (BM Specialties)

Jordan
Yordan Obégi & Co.
Smeisani. Amman
P.O. Box 631
Amman 11118

Tel	6 5682044
	6 5682434
Telefax	6 5685412
Telex	21475 igebo jo
E-Mail	chemical@go.com.jo
Website	www.obegichem.com

Kazakhstan
BASF Agency in Kasachstan
ul. Tole bi 69, Whng. 33
480091 Almaty

Tel	3272 581728
	3272 581734
	3272 628447
Telefax	3272 639308
E-Mail	basfkaz@asdc.kz

Korea, South
BASF Company Ltd.
KCCI Bldg., 9-11th floor
45, Namdaemunno
4-ga, Jung-gu
Seoul 100-743

BCN	8-694-0 (operator)
	8-694-nnnn (direct line)
Tel	2 3707-3100 (Chairman’s Office (BK))
Telefax	2 3707-3122 (Chairman’s Office (BK))

Kuwait
Mazidi Trading Company
W.L.L.
Al Naki Building
Ali Al Salem Street,
Al-Mubarakiya
P.O. Box 228 Safat
13003 Safat Kuwait

Tel	2467177
	2403771
	2403772
Telefax	2468982
	2403770
E-Mail	mazidi@mazidi.com
Website	www.mazidi.com

Latvia
BASF Agency for Estonia,
Latvia and Lithuania
Vilandes iela 1
1010 Riga

BCN	8-7734-0 (operator) 8-7734-nn (direct line)
Tel	7 830401
Telefax	7 930402

Lebanon
Obegi Chemicals S.A.L.
Express Way – Sea Side
Dora District
150 m from Uniterminal
Beirut

Tel	1 900771-73
Telefax	1 900774
E-Mail	chemicals@inco.com.lb

Lithuania
BASF AB Agency for Estonia,
Latvia and Lithuania
Tauro g. 12
2100 Vilnius

Tel	5 2107450
Telefax	5 2107455

Luxembourg
see under Belgium

Macedonia
BASF Agency Skopje
Mitropoliten Teodosij
Gologonov 58
91000 Skopje

Tel	2 220284
Telefax	2 220284
Telex	51726 basfsk mb
E-Mail	basf macedonia@east-europe.basf.org

Malaysia
BASF Petronas Chemicals
Sdn. Bhd.
C 802, Central Tower
Wisma Consplant
Jalan SS 16/4
Subang Jaya
47500 Petaling Jaya
Selangor Darul Ehsan

Tel	3 50316010
Telefax	3 50316010

Malta
De Mattos & Sullivan
Limited
47/1 Tigne Sea Front
Sliema SLM 15
Malta

Tel	21342348 21342349 21312953
Telefax	21342364
E-Mail	demattos@waldonet.net.mt

Mauritius
Mauvilac Chemicals Ltd.
Pailles Road
Les Pailles

Tel 2124607
Telefax 2124308
Telex 4358 mauvi iw

Mexico
BASF Mexicana S.A.
de C.V.
Insurgentes Sur 975
Col. Ciudad de los Deportes
Delegación Benito Juárez
03710 México, D.F.
Apartado Postal 18-953
Col. Tacubaya
Delegación Miguel Hidalgo
11870 México, D.F.

BCN 8-545-2600 (operator)
8-545-nnnn (direct line)
Tel 55 5325-2600
Telefax 55 5325-2777
E-Mail basf-mexicana@notes.basf-corp.com
Website www.basf.com/mexido

Morocco
BASF Maroc S.A.
Société des Colorants,
Matières
Chimiques pour l'Industrie
et l'Agriculture
7, Rue des Orchidées
B. P. 2509
20250 Ain Sebâa/Casablanca

BCN 8-671-400 (operator)
8-671-nnn (direct line)
Tel. 22 669-400
22 351158
22 351183
22 355719
22 355766
22 355776
22 355785
Telefax 22 354832 (Management)
22 350136
22 350517
22 354831
E-Mail basf.maroc@basf-m-s.es

Myanmar
Myanmar Chemicals Co., Ltd.
No. 81,
New University Avenue Road
Bahan Township
Yangon, Myanmar

Tel 1 544930
Telefax 1 545072

Nepal
M/s. Amaravati International
c/o Soaltee Hotel Limited
P.O.B. No. 1481
Tahachal
Kathmandu

Tel 1 272550-55
Telefax 1 272201

Netherlands
BASF Nederland B. V.
Locatie Kadestraat
Kadestraat 1
6811 CA Arnhem
Postbus 1019
6801 MC Arnhem

BCN 8-70-7171 (operator)
8-70-7nnn (direct line)
Tel 26 371-7171
Telefax 26 371-7246
E-Mail info@basf.nl
Website www.basf.nl

New Zealand
BASF New Zealand Ltd.
38 Mahunga Drive
Mangere Bridge
P.O. Box 407
Auckland, 1015

Tel 9 6330200
Telefax 9 6330265

Nicaragua
IMASA
Edificio Malaga,
módulo No. A 15,
Plaza España
Apartado Postal 2658
Managua

Tel 2 660768
2 660489
2 664930
Telefax 2 664930
2 660768
E-Mail imasa@imasa.com.ni

Norway
BASF AS
Leangbukta 40
Postboks 233
1372 Asker

Tel 66792100
Telefax 66904755
E-Mail basf-no@nordic.basf.org
Website www.basf.com/nordic

Oman
Reem Scientific & Energy
Technologies LLC (Reset)
Building No. 1329,
Way No. 9342
Al Waljat Street
P.O. Box 879
Postal Code 113
Muscat

Tel 736239
736573
Telefax 740423
740230
Telex 5542 omzest on

Pakistan
BASF Pakistan
(Private) Limited
46-A, Block-6
P.E.C.H.S.
P.O. Box 3171
Karachi-75400

Tel 21 111550550
21 4549171
21 4529174
21 4520534
21 4539881
21 4530682
Telefax 21 4547815 (General)
21 4546552 (General)
21 4385505
(Controlling + Finance)
21 4524314
(Sales + Marketing)
E-Mail basfpak@cyber.net.pk

Panama
BASF Panama S.A.
Edificio Centro Comercial
Plaza Balboa
Local 30, Nivel 300
Vía Israel, Punta Paitilla
Corregimiento de San Francisco
Ciudad de Panama

Tel 265-4224
265-4223
Telefax 265-4222
E-Mail basfpma@pty.com

Paraguay
BASF Paraguaya S.A.
Independencia Nacional N° 811
Esquina Fulgencio R. Moreno
Edificio El Productor – Piso 12 y 14
Casilla de Correo N° 3364
Asunción

Tel 21 498401
Telefax 21 498403

Peru
BASF Peruana S.A.
Av. Oscar R. Benavides
No. 5915, Callao 1
Casilla 3911
Lima 100

Tel	1 464-7400
Telefax	1 464-2940 (Management) 1 464-6622 1 464-0302 (Sales and General) 1 4519611 (Prämix)

Philippines
BASF Philippines, Inc.
Main Office & Plant (ED)
Road 5, Phase 1 GIZ
Carmelray Industrial Park 1
4028 Canlubang,
Calamba, Laguna

Tel	49 549-0001
Telefax	49 549-1026

Poland
BASF Polska Sp. z o.o.
Aleje Jerozolimskie 154
02-326 Warszawa

BCN	8-762-777 (operator) 8-762-nnn (direct line)
Tel	22 5709-999 (operator) 22 5709-777 (operator) 22 5709-... (direct line)
Telefax	22 5709-599
E-Mail	poczta@basf.pl
Website	www.basf.pl

Portugal
BASF Portuguesa, Lda.
Rua Manuel Pinto de
Azevedo, 626
4100-320 Porto
Apartado 1142
4102-001 Porto Codex

Tel	22 6159600
Telefax	22 6177520

Romania
BASF SRL
155, Calea Victoriei
Bl. D1, Tronson 6-7, Et. 6
71102 Bucuresti-1
P.O. Box 1-305
70700 Bucuresti-1

BCN	8-772-100 (operator)
	8-772-nnn (direct line)
Tel	21 3134611
	21 3134612
	21 3134613
Telefax	21 3100395
	21 3100762
E-Mail	it.romania@east-europe.basf.org

Russia, Federation
BASF CIS Trading GmbH
Business Center Moskau
Kadaschewskaja
Nabereshnaja 14
Korp. 3
119017 Moskau

BCN	8-770-200 (operator)
	8-770-nnn (direct line)
Tel	503 9569-170 (operator)
	503 2317-200
	503 2317-... (direct line)
Telefax	503 9569-174
	503 2317-201

Saudi Arabia
Yusuf Bin Ahmed Kanoo
BASF Division
Medina Road km 9
P.O. Box 812
Jeddah 21421

Tel	2 6673
	ext. 507 / 508 / 509
Mobil-Tel	55676970
Telefax	2 6655652 (direkt)
	2 6695801
	(Kanoo Zentrale)
Telex	601039/1 ybak sj
E-Mail	basf@jed.kanoosa.com

Singapore
BASF Singapore Pte. Ltd.
7 Temasek Boulevard
35-01 Suntec Tower One
Singapore 038987

BCN	8-65-3400 (operator)
	8-65-nnnn (direct line)
Tel	63370330
Telefax	63340330
Website	www.basf.com.sg

Slovakia
BASF Slovensko spol. s r.o.
Frana Krála 35
811 05 Bratislava

Tel	2 57101011
Telefax	2 57101066
Telex	92250 basfb c

Slovenia		
BASF Slovenija d.o.o.	BCN	8-7736-0 (operator)
Dunajska cesta 111 a		8-7736-nn (direct line)
1000 Ljubljana	Tel	15 897500
	Telefax	15 685556

South Africa		
BASF South Africa	BCN	8-670-9 (operator)
(Pty.) Ltd.		8-670-nnn (direct line)
Business Center	Tel	11 2542400
Johannesburg	Telefax	11 2542431
852 16th Road		11 2542432
Midrand 1685		11 2542434
P.O. Box 2801		11 2542430 (Managing Dir.)
Halfway House 1685		11 3141690 (Human Res.)

Spain		
BASF Curtex S.A.	Tel	93 2616100
Carretera del Medio, 219	Telefax	93 2616109
08907 L’Hospitalet de Llobregat		

Sri Lanka		
BASF-Finlay (Pvt.) Ltd.	Tel	1 423388
Finlay House		1 423389
186, Vauxhall Street	Telefax	1 431400
Colombo 2	E-Mail	basfsl@itmin.com

Sweden		
BASF AB	BCN	8-730-800 (operator)
– Plastics Nordic/Baltic		8-730-nnn (direct line)
– Chemicals Nordic/Baltic	Tel	31 639-800
– Coatings & Pigments	Telefax	31 639-900
– Nordic/Baltic	E-Mail	basf-se@nordic.basf.org
– Detergents & Automotive	Website	www.basf.com/nordic
– Nordic/Baltic		
– Dispersions Nordic/Baltic		
– Salts Nordic/Baltic		
Haraldsgatan 5		
413 14 Göteborg		

Switzerland
BASF (Schweiz) AG
Appital
Postfach 99
8820 Wädenswil/Au

BCN 8-750-111 (operator)
8-750-nnn (direct line)
Tel 1 7819-111
Telefax 1 7819-388
E-Mail info@basf.ch
Website www.basf.ch

Syrian Arab Republic
Obégi Chemicals S.A.S.
Old El Bab Road
Nakkarin Area
B.P. 89
Alep

Tel. (21) 27 38 12,
Tel 21 4469731
21 4469732
Telefax 21 4469540
E-Mail chemalep@net.sy

Taiwan
BASF Taiwan Ltd.
Empire Building, 16th floor
No. 87, Sung Chiang Road
P.O. Box 3134
Taipei, Taiwan

BCN 8-695-9 (operator)
8-695-nnn (direct line)
Tel 2 25187600
2 25068131
3 4502113 (factory)
Telefax 2 25061554
2 25187700
Telex 21649 basftwan
E-Mail admin@basf-taiwan.com.tw
Website www.basf-taiwan.com.tw

Thailand
BASF (Thai) Ltd.
Main Office
23rd floor, Emporium Tower
622 Sukhumvit Road
Klongton, Klongtoey
Bangkok 10110
G.P.O. Box 1283

Tel 2 6649222
Telefax 2 6649221
E-Mail basf@samart.co.th

Tunisia
BASF Tunisie S.A.
Z.I. Saint Gobain
2033 Mégrine-Tunis

Tel 71 425488
Telefax 71 425043
71 426120
71 427215
71 427713
E-Mail basf.tunisie@basf-tunisie.com

Turkey
BASF Türk
Kimya Sanayi ve Ticaret
Ltd. Sti.
Defterdar Yokusu No. 3
80040 Tophane-Istanbul
P.K. 424
80004 Karaköy-Istanbul

Tel 212 2516500-10 pbx
212 2510037
212 2510041
212 2494212
Telefax 212 2441673
212 2510064

Ukraine
Repräsentanz der BASF
CIS GmbH in der Ukraine
ul. Patrisa Lumumby 4/6
5. + 6. Etage
01042 Kiew

BCN 8-776-200 (operator)
8-776-nnn (direct line)
8-776-240 (Central telefax)

United Arab Emirates
BASF FZE
Business Center Dubai
Jebel Ali Free Zone
P.O. Box 61309
Dubai

Tel 4 8838773
Telefax 4 8838675
4 8836787
E-Mail basfkanoo@west-asia.basf.org

United Kingdom
BASF plc
P.O. Box 4
Earl Road
Cheadle Hulme
Cheadle
Cheshire SK8 6QG

BCN 8-33-5983 (operator)
8-33-nnnn (direct line)
Tel 161 4856222
161 488-.... (direct line)
Telefax 161 4860891
Telex 664006 basf g

Uruguay
BASF Uruguaya S.A.
Camino Ariel 4620
12900 Montevideo
Casilla Correo 1925
11000 Montevideo

Tel 2 3551414
2 3553183
2 3553184
Telefax 2 3558868
2 3558869
Telex 22357 basf uy

USA
BASF Corporation
Wyandotte Site
1609 Biddle Avenue
Wyandotte, Michigan 48192

BCN 8-472-1111 (operator)
8-472-nnnn (direct line)
Tel 734 324-6000

Uzbekistan
BASF Agency in Usbekistan
Beethovenstraße 3
700064 Taschkent

Tel 712 548250
712 545737
712 548472
712 541879
Telefax 711 206231
E-Mail furkat@basf.com.uz

Venezuela
BASF Venezolana, S.A.
Multicentro Macaracuay,
Piso 10
Avenida Principal de
Macaracuay
Macaracuay, Caracas 1070
Apartados 70316 y 70317
Caracas 1071-A

Tel 212 256-3430
212 256-4582
Telefax 212 256-3379
212 256-0580

Vietnam
Resident Representative
Main
Office of BASF Singapore
Pte. Ltd.
Saigon Trade Center, # 1701-1711
37, Ton Duc Thang Street
Dist. 1, Ho Chi Minh City

Tel 8 8243833
Telefax 8 8243832
E-Mail basf_hcmc@hcm.vnn.vn

Yemen
M. S. G. Elsoffary & Sons
BASF Division
P. O. Box 2142
Sanaa

Tel 1 218042
Telefax 1 218042
Telex 2282 sofary ye

Yugoslavia
BASF Aktiengesellschaft
Predstavnistvo u Jugoslaviji
Djure Djakovica 78
11000 Beograd

BCN 8-7733-100 (operator)
8-7733-nnn (direct line)
Tel 11 772-999
Telefax 11 751743

Zimbabwe
HiServe Chemicals (Pvt) Ltd.
10 Kenmark Crescent
Bluff Hill Industrial Park
Faber Road
Harare

Tel 4 310162/3/4
Telefax 4 331168

Dialing code
for use from Germany to other countries.

Algeria	00213
Angola	00244
Argentine	0054
Australia	0061
Austria	0043
Bahrein	00973
Bangladesh	00880
Barbados	001809
Belarus	007
Belgium	0032
Bolivia	00591
Brazil	0055
Brunei	00673
Bulgaria	00359
Canada	001
Chile	0056
China	0086
Colombia	0057
Costa Rica	00506
Croatia	0038
Cuba	0053
Czech Republic	0042
Denmark	0045
Dominican Republic	001809
Ecuador	00593
Egypt	0020
El Salvador	00503
Estonia	00372
Ethiopia	00251
Finland	00358
France	0033
Ghana	00233
Greece	0030
Guatemala	00502

Haiti	00509
Honduras	00504
Hongkong	00852
Hungary	0036
India	0091
Indonesia	0062
Iran	0098
Iraq	00964
Ireland	00353
Israel	00972
Italy	0039
Ivory Coast	00225
Jamaica	001809
Japan	0081
Jordan	00962
Kazakhstan	007
Kenya	00254
Korea, South	0082
Kuwait	00965
Latvia	00371
Lebanon	00961
Liberia	00231
Lithuania	00370
Macedonia	00389
Malawi	00265
Malaysia	0060
Malta	00356
Mauritius	00230
Mexico	0052
Morocco	00212
Myanmar	0095
Nepal	00977
Netherlands	0031
New Zealand	0064
Nicaragua	00505
Nigeria	00234
Norway	0047

Oman	00968
Pakistan	0092
Panama	00507
Papua, New Guinea	00675
Paraguay	00595
Peru	0051
Philippines	0063
Poland	0048
Portugal	00351
Puerto Rico	001
Qatar	00974
Romania	0040
Russ. Federation	007
Saudi Arabia	00966
Singapore	0065
Slovakian Republic	0042
Slovenia	00386
South Africa	0027
Spain	0034
Sri Lanka	0094
Sweden	0046
Switzerland	0041
Syrian Arab Republic	00963
Taiwan	00886
Thailand	0066
Trinidad & Tobago	001809
Tunisia	00216
Turkey	0090
Ukraine	007
United Arab Emirates	00971
United Kingdom	0044
Uruguay	00598
USA	001
Uzbekistan	007
Venezuela	0058
Vietnam	0084

Yemen	00967
Yugoslavia	0038
Zimbabwe	00263

Index